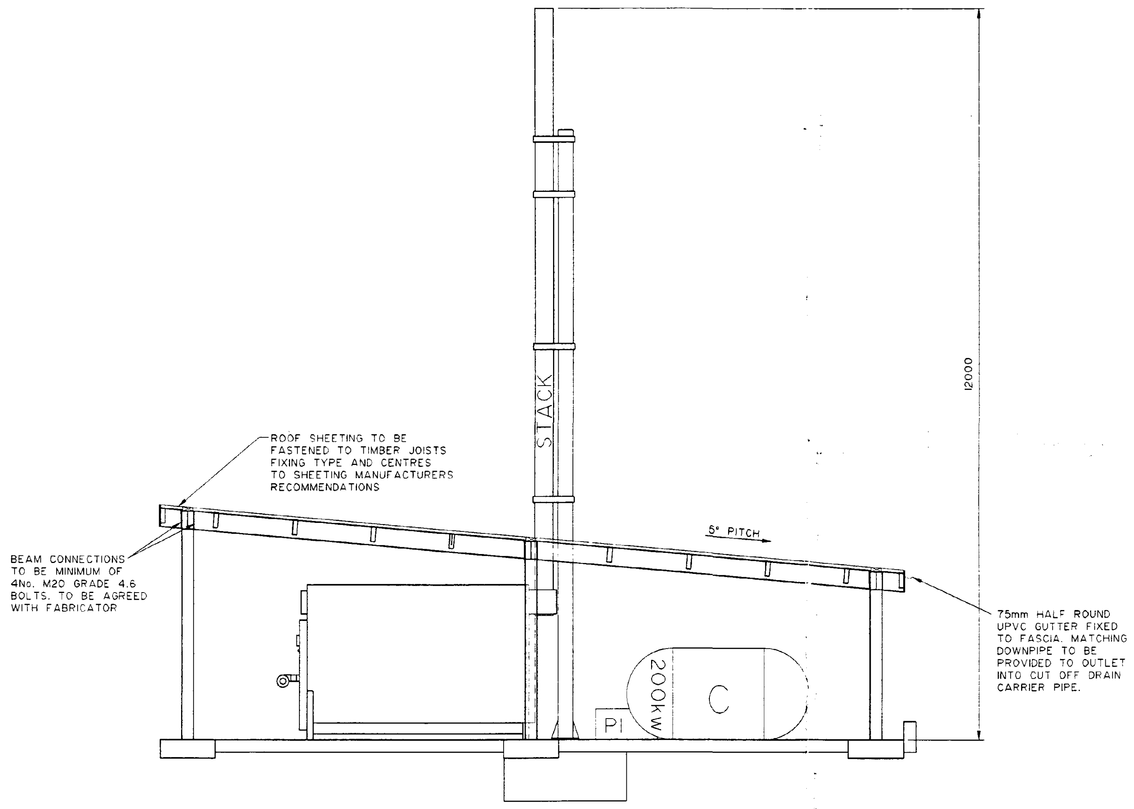

SECTION A-A

ALL CONCRETE TO BE GRADE 30 C20P.
ALL STEELWORK CONNECTIONS TO HAVE MINIMUM OF 2 No. M20 FIXINGS. ALL CLEATS TO BE FABRICATED FROM 75x75x8 ANGLE. ALL WELDS TO BE 6mm FILLET WELDS. STEELWORK TO BE BLAST CLEANED AND PRIMED WITH HIGH BUILD ZINC PHOSPHATE MODIFIED ALKYD PRIMER MIN. THICKNESS 75µm. FOLLOWING ERECTION PRIMER TO BE TOUCHED IN AS NECESSARY AND TOP COAT OF HB ALKYD FINISH 60µm MIN. THICKNESS COLOUR TO SUIT CLIENT OR TO BE CONFIRMED.

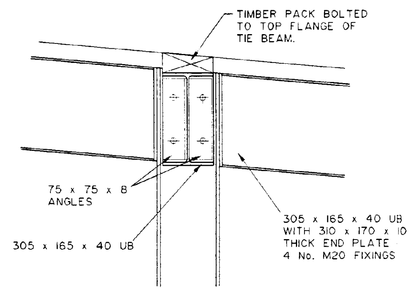

DETAIL AT TIE BEAM

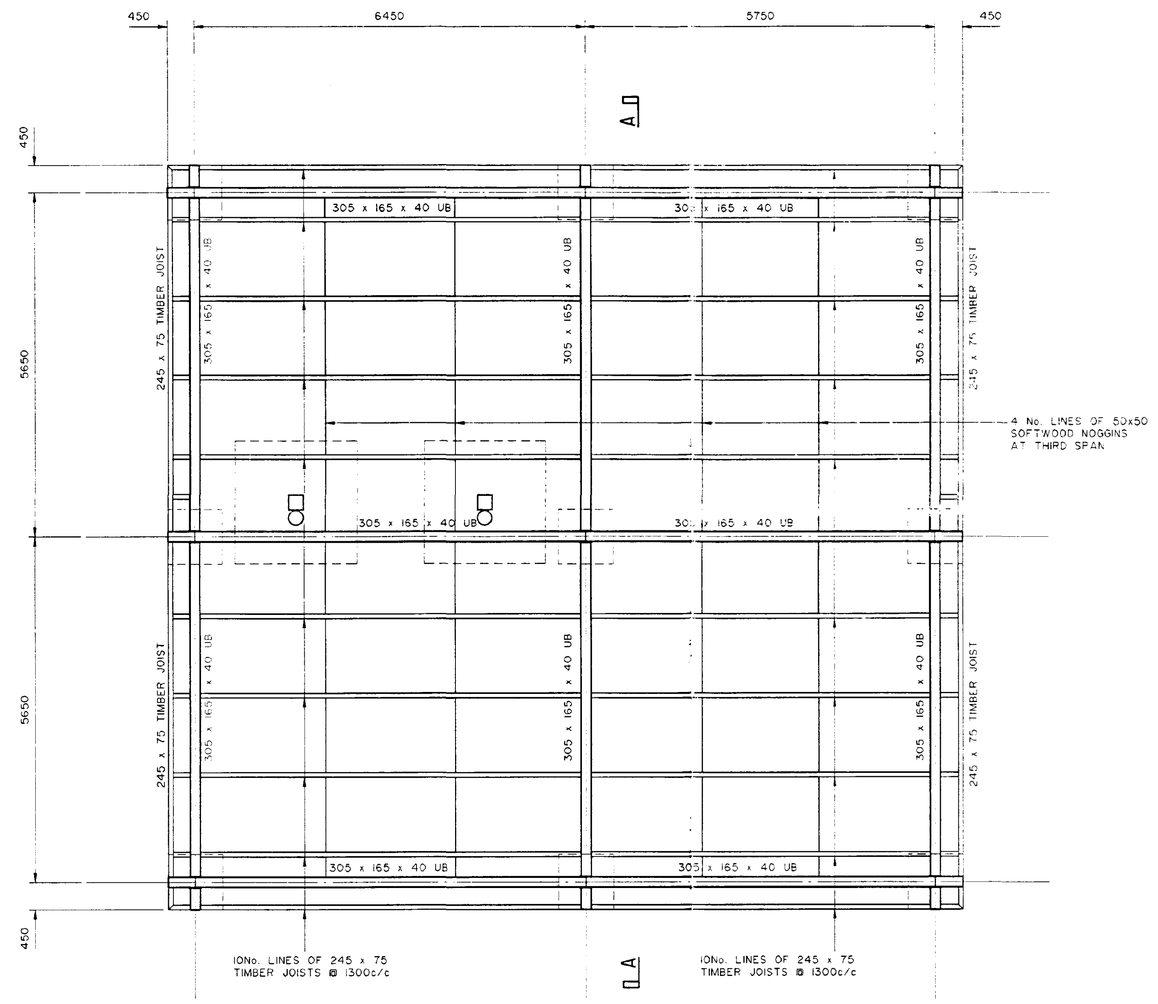

PLAN OF CANOPY SUPPORT STEELWORK

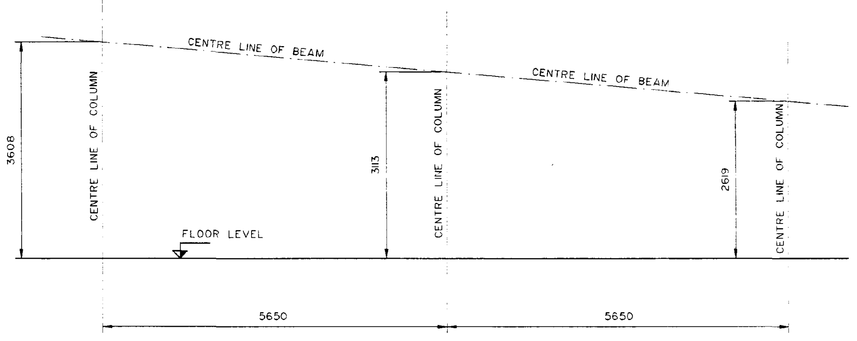

SETTING OUT DETAILS

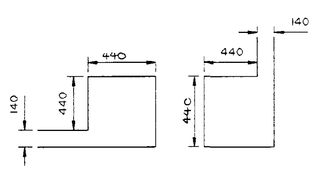

PIER DETAILS

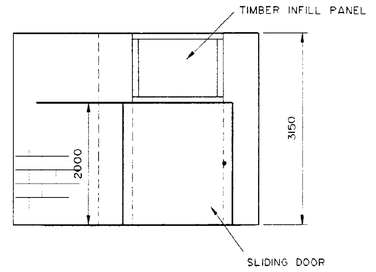

ELEVATION

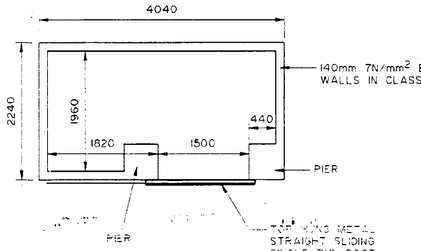

PLAN
CONTROL ROOM

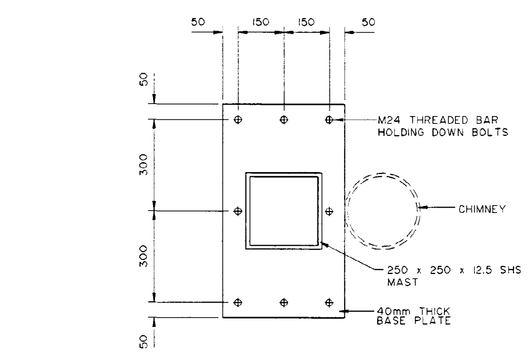

MAST BASEPLATE DETAIL
(1:10)

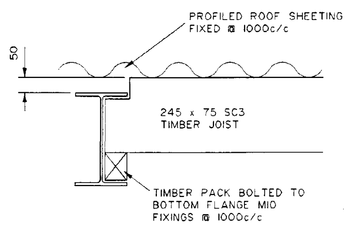

DETAIL AT ROOF SUPPORT BEAM

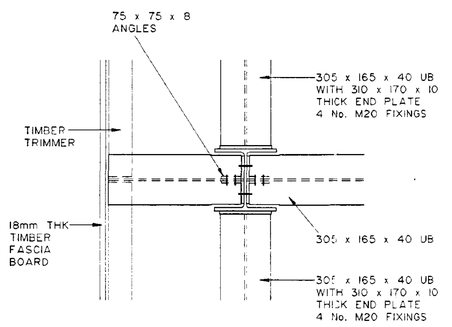

DETAIL AT BEAM TO COLUMN CONNECTIONS

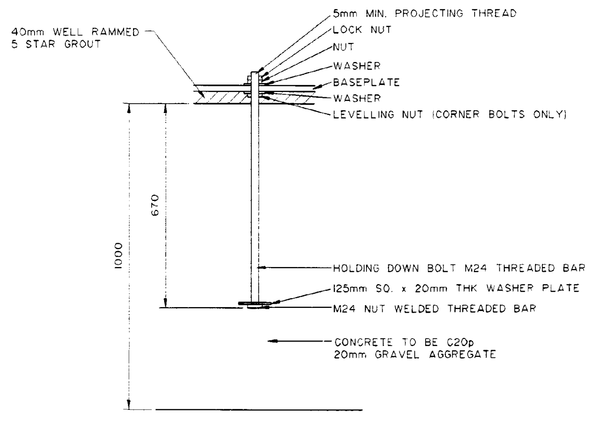

MAST HOLDING DOWN BOLT DETAIL
(1:10)

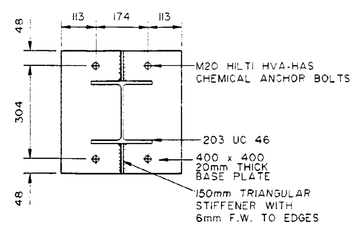

BASEPLATE DETAIL
(1:10)

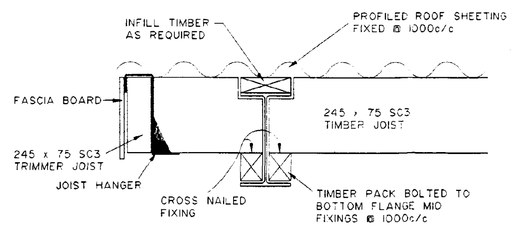

DETAIL AT CANOPY EDGE

FRONT ELEVATION

NOTES

1. THIS DRAWING IS COPYRIGHT AND THE PROPERTY OF WATERMAN BBT AND IS NOT TO BE COPIED IN WHOLE OR IN PART EXCEPT UNDER A WRITTEN AGREEMENT.
2. DO NOT SCALE THIS DRAWING. ANY DISCREPANCY IS TO BE REPORTED TO THE ENGINEER IMMEDIATELY.
3. THIS DRAWING IS TO BE READ IN CONJUNCTION WITH ALL ENGINEER'S, ARCHITECTS OR OTHER RELEVANT DRAWINGS AND SPECIFICATIONS.
4. ALL DIMENSIONS AND LEVELS ARE TO BE CHECKED ON SITE BY THE CONTRACTOR PRIOR TO PREPARING ANY WORKING DRAWINGS OR COMMENCING ON SITE.
5. THE CONTRACTOR MUST ENSURE AND WILL BE HELD RESPONSIBLE FOR THE OVERALL STABILITY OF THE BUILDING/STRUCTURE/EXCAVATION AT ALL STAGES OF THE WORK.
6. ALL WORK BY THE CONTRACTOR MUST BE CARRIED OUT IN SUCH A WAY THAT ALL REQUIREMENTS UNDER THE HEALTH AND SAFETY AT WORK ACT ARE SATISFIED.
7. ALL WORK IS TO BE CARRIED OUT IN COMPLIANCE WITH THE REQUIREMENTS OF THE RELEVANT STATUTORY AUTHORITIES AND REGULATIONS.

Rev.	Date	By	Description
A	11/7	SPM	CONSTRUCTION ISSUE REDRAWN

REVISION

AMENDED PLANS
Ref.

SOUTH [illegible] AND DC HOUSE [illegible] PLANNING
18 JUL 1995
Ref: Halo2221/95

Waterman BBT
CONSULTING ENGINEERS
BRADSHAW HOUSE, 34 WATERLOO LANE, LEEDS LS1 2JB
Tel. 0113-256-3322 Fax. 0113-257-5871
ELISABETH HOUSE, St. PETER'S SQUARE, MANCHESTER M2 3DF
Tel. 0161-236-8225 Fax. 0161-236-8159

CLIENT: BIOMASS RECYCLING LTD

PROJECT: MIDAS DEMONSTRATION LAGOON

TITLE: PLANT AREA DETAILS

DATE	SCALE
MAY 1995	1:50

DRAWN	CHECKED	DRAWING NO.	
SPM	[illegible]	4942-25	A