FILE NAME C:\CAD\99215\1.DGN
PLOT DATE Feb 22, 2000
PLOT TIME 13:39:39



FOUL WATER MANHOLE SCHEDULE

M/H	Approx. Cl.	I.L.	Type	Dia. (mm)	Remarks
Wet Well	2.31	-1.15	-	2100	Refer to Dwg 99215/12
F1					Omitted
F2	2.35	-1.07	A	1200	Negative IL
F3	2.17	-0.36	B	1200	Negative IL
F4	2.31	-0.23	B	1200	Negative IL
F4A	2.32	0.16	B	1200	Negative IL
F5	2.25	-0.07	B	1200	Negative IL
F6	2.37	0.25	B	1200	
F7	2.62	0.67	B	1200	
F8	3.70	2.35	C	1240 x 675	Estimated IL *

* New manhole on line of existing sewer.

SURFACE WATER MANHOLE SCHEDULE

M/H	Approx. Cl.	I.L.	Type	Dia. (mm)	Remarks
S1	2.30	0.40	C	1240 x 900	
S2	2.13	0.57	C	1240 x 900	
S3	2.35	0.75	C	1240 x 825	
S3A	2.28	0.80	C	1240 x 825	
S4	2.22	0.84	C	1240 x 825	
S5	2.38	1.02	C	1240 x 825	
S6	2.83	1.28	C	1240 x 750	

STREET LIGHTING SPECIFICATION

1 Street lighting works are to be carried out in accordance with Lincolnshire County Council's Appendix H of the current Lincolnshire Design Guide for residential area.

2 Street lighting columns to be to LCC specification 5/35/C/93. 5m high.

3 Lantern Equipment as follows: Philips ME 050T B POS 5.

4 All columns to have individual R.E.C. supplies with Type 'A' terminations to LCC standard drawing SD/14/4A.

5 Columns shall not be installed in dropped kerb areas without prior agreement from the Street Lighting Engineer.

6 Advise Street Lighting Engineer before installation commences in order that exact column positions may be marked on site.

CONSTRUCTION (DESIGN & MANAGEMENT) REGULATIONS 1994

The Contractors' attention is drawn to the requirements of the Construction (Design & Management) Regulations 1994 and the Health & Safety at Work Act 1974 in respect of undertaking road and drainage works and associated construction on this project.

In particular, the Contractor should be aware of the following:

1 Proposed drainage requirements necessitate trench excavations in excess of 1.2 metres depth. As such, the Contractor should ensure that adequate support is provided to ensure the health and safety of operatives undertaking pipe laying, culverting, manhole construction and associated works in such circumstances.

2 The Contractor is advised that the site is adjacent to an existing public highway.

Prior to commencement of the works, the Contractor should liaise with the Highway Authority to determine their requirements for the management of existing vehicular and pedestrian movement.

In particular, the Contractor should ensure that all necessary traffic signing and road markings are provided in accordance with the requirements of the Highway Authority.

3 The Contractor is advised that the development will involve works within the public highway and/or public open space.

In accordance with the New Roads and Street Works Act 1991, requisite notices should be submitted to the Highway Authority prior to commencement of works within these areas.

The Contractor is also advised that within the public highway are existing underground services, the location and depth of which should be determined and clearly identified prior to the commencement of the works.

4 The Contractor is advised that, as a requirement of the development, a site visibility splay is to be provided at the junction of the new access road with the existing public highway.

This visibility splay should be established as a matter of priority at the commencement of the works.

Furthermore, throughout the duration of the works, there should be no obstruction placed within this splay which may inhibit the visibility of vehicles entering or existing the new access road.

5 The Contractor is advised that within the site are existing underground services.

The Contractor should liaise with the appropriate authority to determine their requirements for the protection of these services throughout the duration of the works.

6 The Contractor is advised that within and adjacent to the site are existing overhead power lines and that adequate measures should be taken to ensure the safety of personnel working within their vicinity.

7 The Contractor is advised that the proposed development is adjacent to an existing river/watercourse and that adequate measures should be taken to ensure the safety of personnel working within the vicinity.

8 The Contractor should refer to the soils investigation report for the site to determine existing ground conditions.

LEGEND

FOUL WATER MANHOLE (Refer to Manhole Schedule)

FOUL WATER RISING MAIN

SURFACE WATER MANHOLE (Refer to Manhole Schedule)

ROAD GULLY (450mm dia. X 750m deep)

EXTERNAL DPC LEVEL TO HOUSES — DPC 2.45

FINISHED FLOOR LEVEL TO GARAGES — FFL 2.15

STREET LIGHTING COLUMN - 5m

PRIVATE LIGHTING BOLLARD - 1.2m Type - MAXIME by NORAL

PEDESTRIAN CROSSING (Incorporating tactile paving)

NOTES

1 All adoptable drainage works to be in accordance with the Water Authorities Association 'Sewers for Adoption' guide, FOURTH EDITION.

2 All adoptable highway works to be in accordance with Lincolnshire County Council documents 'Design Guide for Residential Areas' and 'Development Road Construction Specification Construction 1991'.

3 All private drainage connections to adoptable manholes and sewers to be 150mm diameter flexibly jointed clayware pipes (unless diameter of pipe is shown otherwise).

IMPORTANT NOTE (Section 104 Works)

Precast concrete pipes and manhole sections complying with BS 5911, together with all insitu concrete, shall be manufactured to resist Class 3 sulphate concentrations as specified in BRE Digest 363

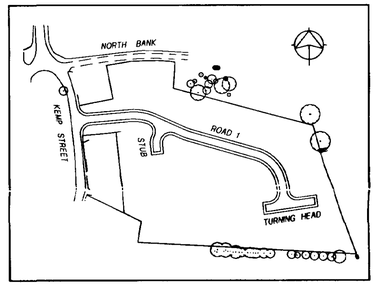

SCHEMATIC ROAD LAYOUT
Scale - NTS

5 0 5 10 15 20 25 37.5 50
SCALE 1:500

Rev. No.	Revision	Date	Drawn
G	Private lighting to POS shown.	13/2/00	BRC
A	Street lighting added.	28/5/99	BRC
B	Section 104 comments incorporated.	9/7/99	BRC
C	Pumping station compound, main drainage and MH schedules revised.	15/7/99	BRC
D	Sewer gradients revised.	23/7/99	BRC
E	Plot 13 garage adjusted, sub station added.	20/8/99	BRC
F	Sub station revised.	1/10/99	BRC

TRIBRACH ASSOCIATES
consulting civil & structural engineers
14 Eversley Road, Bexhill on Sea, East Sussex, TN40 1EU
Tel: (01424) 216214 Fax: (01424) 784284

Client: ABBEY DEVELOPMENTS LTD.

Project: KEMP STREET CROWLAND, LINCOLNSHIRE

Drawing: ADOPTABLE ROAD AND DRAINAGE LAYOUT

Scales Horizontal: 1:500 Vertical: Date: May 1999

DRAWING No: 99215/1 Rev. G

SOUTH HOLLAND DC HOUSING & PLANNING 03 SEP 2001 Ref: 1062/01

FILE NAME C:\CAD\99215\3.DGN
PLOT DATE Oct. 25, 1999
PLOT TIME 15:34:19

FOUL WATER RISING MAIN

Rising main to be 100mmø MDPE Class C pipes in black complying with BS 3505 and WI's No. 4-32-03 - SDR rating of 11. Rising main to be laid with a minimum cover of 1.2m in a Class S granular bed and surround.
To be laid as shown on the layout with a constant vertical rise from the pumping station to the outfall manhole (F8).
Marker tape incorporating a tracing wire to be provided 300mm above rising main.

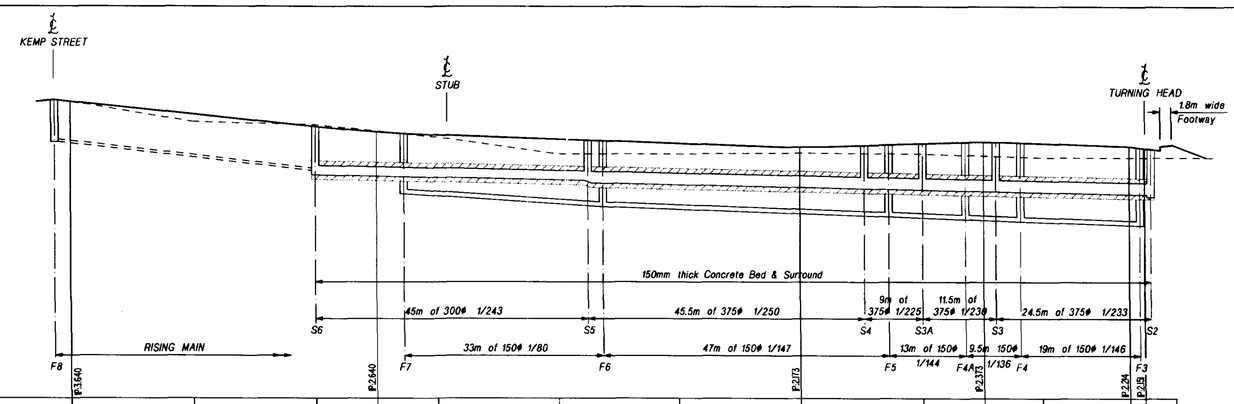

| | | |

FILE NAME C:\CAD\99215\4.DGN
PLOT DATE Oct. 25, 1999
PLOT TIME 15:35:40

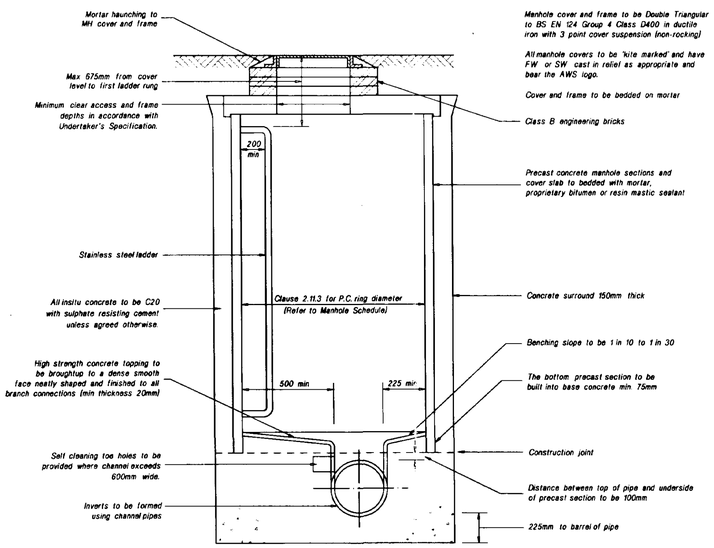

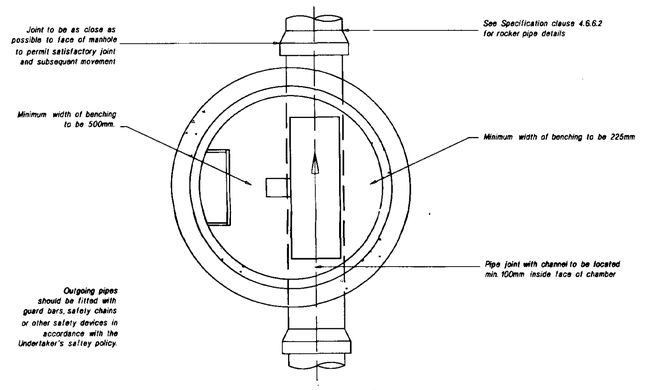

TYPICAL MANHOLE DETAIL - TYPE A

Depth from ground level to soffit of pipe 3m to 6m
Scale N.T.S.

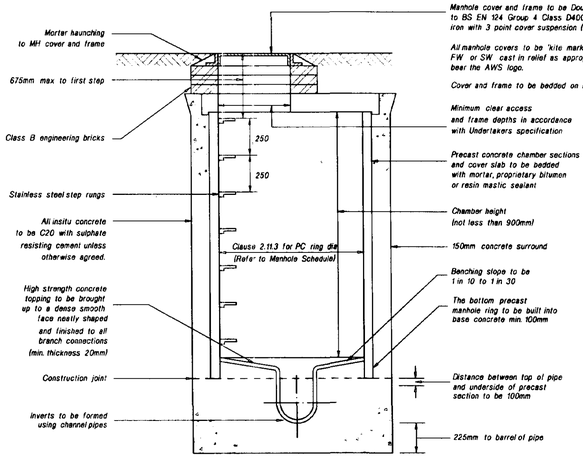

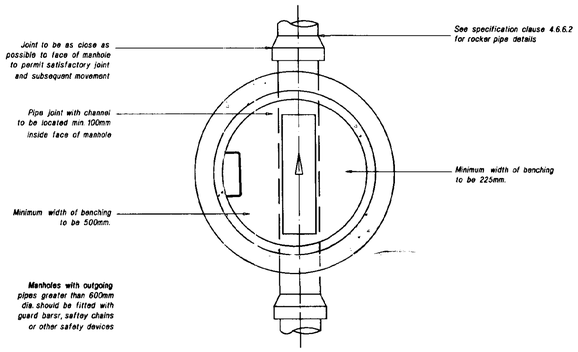

TYPICAL MANHOLE DETAIL - TYPE B

Max. depth from ground level to soffit of pipe 3.0m
Scale N.T.S.

IMPORTANT NOTE (Section 104 Works)

Precast concrete pipes and manhole sections complying with BS 5911, together with all insitu concrete, shall be manufactured to resist Class 3 sulphate concentrations as specified in BRE Digest 363

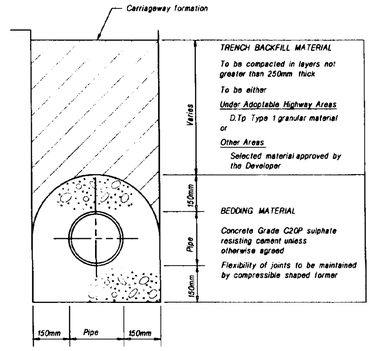

TYPICAL TRENCH DETAIL
(Concrete Surround)

SCALE N.T.S.

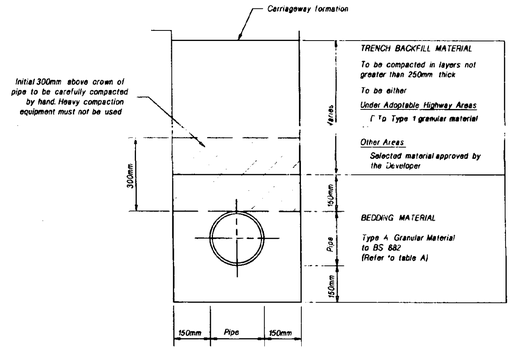

TYPICAL TRENCH DETAIL

SCALE N.T.S.

NOTES

1. All adoptable drainage works to be in accordance with the Water Authorities Association 'Sewers for Adoption' guide, FOURTH EDITION.
2. All private drainage connections to adoptable sewers and manholes to be made with clayware or concrete pipes (as necessary) and NOT with uPVC goods.
3. Position of cover slab openings and step irons to be as directed on site by Water Authority inspector.
4. Any construction joints in the 150mm thick concrete surround must NOT coincide with the joints of the precast concrete chamber sections.
5. All pipework and fittings are to comply with the following:
   VITRIFIED CLAY - to BS EN 295 (foul)
   - to BS 65 (surface)
   CONCRETE - to BS 5911: Part 100 Class H
   DUCTILE IRON - to BS EN 598
6. All materials to be 'Kite' marked where available.

TABLE A

Nom. Pipe Size	Granular Bedding Requirements
150mm	10mm or 14mm nominal single size or 14mm to 5mm graded
Over 150mm to 300mm	10mm, 14mm or 20mm nominal single size or 14mm to 5mm graded or 20mm to 5mm graded
Over 300mm to 600mm	14mm or 20mm nominal single size or 14mm to 5mm graded or 20mm to 5mm graded
Over 600mm	14mm, 20mm or 40mm nominal single size or 14mm to 5mm graded or 20mm to 5mm graded or 40mm to 5mm graded

NOTICE TO CONTRACTORS

The Contractor's attention is drawn to the requirements of the Construction (Design and Management) Regulations 1994 (CDM Regulations) and the Health and Safety at Work Act 1974 in respect to undertaking road and drainage works and associated construction on this project.

In particular, the Contractor should be aware that where the depth of trench excavation exceeds 1.2m, all necessary support shall be provided to ensure the health and safety of operatives undertaking pipe laying and associated works.

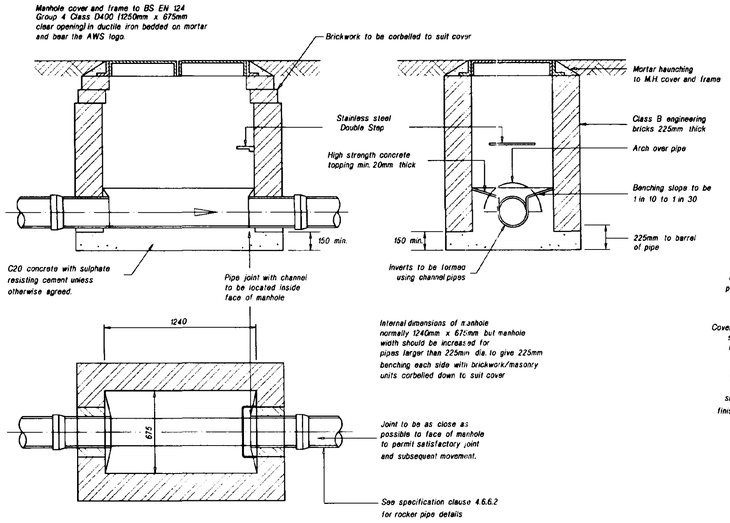

TYPICAL MANHOLE DETAIL - TYPE C

Depth from ground level to soffit of pipe 1.00m to 1.45m
Scale N.T.S.

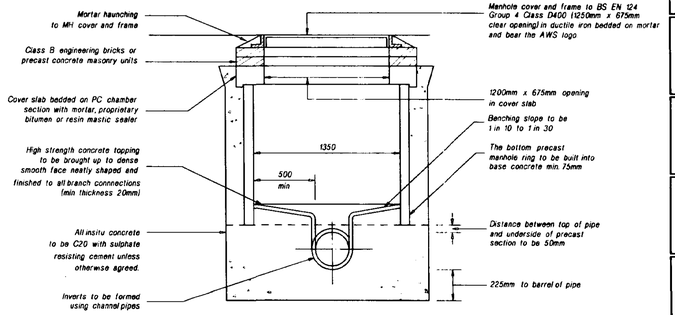

TYPICAL MANHOLE DETAIL - TYPE E

Depth from ground level to soffit of pipe 1.0m to 1.45m
Scale N.T.S.

Rev. No.	Revision	Date	Drawn
A	Section 104 comments incorporated.	9/7/99	BHC

TRIBRACH ASSOCIATES
consulting civil & structural engineers
14 Eversley Road, Bexhill on Sea, East Sussex, TN40 1EU
Tel: (01424) 216214 Fax: (01424) 734284

Client: ABBEY DEVELOPMENTS LTD.

Project: KEMP STREET
CROWLAND, LINCOLNSHIRE

Drawing: TYPICAL DRAINAGE DETAILS

Scales
Horizontal: As Shown
Vertical:
Date: May 1999

DRAWING No: 99215/4 Rev. A

SOUTH HOLLAND DC
HOUSING & PLANNING
03 SEP 2001

FILE NAME C:\CAD\99215\5.DGN
PLOT DATE Oct. 25, 1999
PLOT TIME 15:37:56

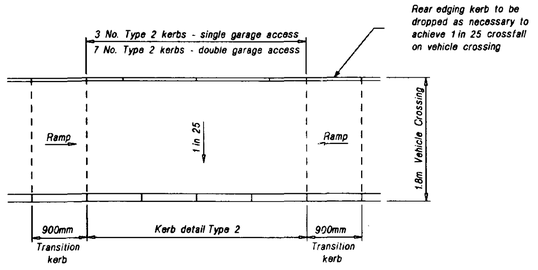

DOMESTIC VEHICLE CROSSING ARRANGEMENT DETAIL

Scale - N.T.S.

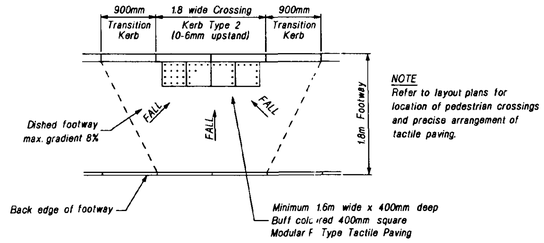

NOTE
Refer to layout plans for location of pedestrian crossings and precise arrangement of tactile paving.

PEDESTRIAN CROSSING ARRANGEMENT DETAIL

Scale - N.T.S

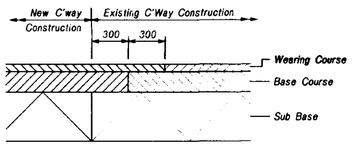

CARRIAGEWAY CONSTRUCTION JOINT DETAIL

Scale - N.T.S.

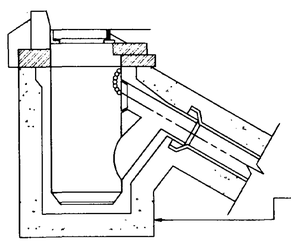

Frame to be set 6mm below finished wearing course

Gully grating and frame in Grey Iron to BS EN 124, Ref : D400
Grating and frame to be 'Kite' marked.

2 courses min/ 4 course max Class B engineering brickwork 225mm thick in English bond in 1:3 mortar

450mm x 750mm gully pot to be deep seal trapped to BS 5911 : Part 2 incorporating a minimum seal of 80mm with a 150mm dia. outlet fitted with a stopper and chain.

150mm thickness bed and surround insitu concrete to pot and gully connection.

Insitu concrete to have a minimum cement content of 330 kg/m³ Use Portland cement conforming to BS 12
Max. free water/cement ratio not more than 0.50.
Maximum aggregate size to be 20mm.

TYPICAL GULLY DETAIL

Scale N.T.S.

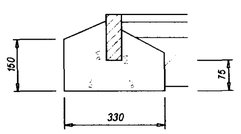

50mm x 150mm precast concrete edging kerb to BS 7263 TYPE EF set on 75mm thick bed of Grade ST3 insitu concrete and haunched as shown

Insitu concrete to have a minimum cement content of 330 kg/m³ Use Portland cement conforming to BS 12
Max. free water/cement ratio not more than 0.50.
Maximum aggregate size to be 20mm.

KERB DETAIL - TYPE 3

Scale N.T.S.

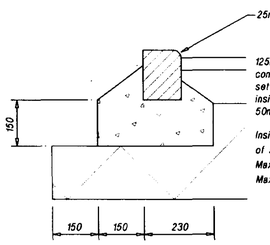

125mm x 150mm Bullnosed precast concrete kerb to BS 7263 TYPE BN set on bed and backing of Grade ST3 insitu concrete haunched to within 50mm of the top of kerb.

Insitu concrete to have a minimum cement content of 330 kg/m³ Use Portland cement conforming to BS 12
Max. free water/cement ratio not more than 0.50.
Maximum aggregate size to be 20mm.

KERB DETAIL - TYPE 2

Scale N.T.S.

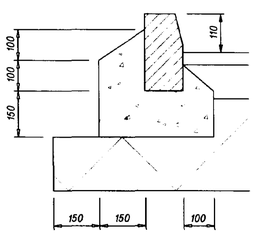

125mm x 255mm Half Battered precast concrete kerb to BS 7263 TYPE HB2 set on bed and backing of insitu concrete haunched to within 50mm of the top of kerb.

Insitu concrete to have a minimum cement content of 330 kg/m³ Use Portland cement conforming to BS 12
Max. free water/cement ratio not more than 0.50.
Maximum aggregate size to be 20mm.

KERB DETAIL - TYPE 1

Scale N.T.S.

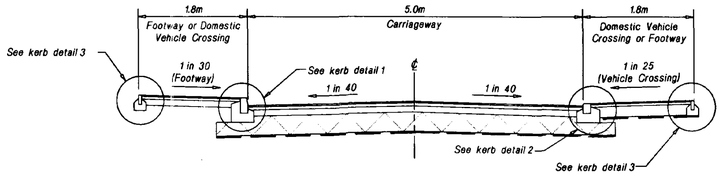

FOOTWAY CONSTRUCTION

25mm thick Dense Bitumen Macadam wearing course (6mm nominal size) to BS 4987 Clause 7.5

50mm thick Dense Bitumen Macadam base course (20mm nominal size) to BS 4987, Clause 6.5

100mm thick D.Tp. Type 1 granular sub base

GENERAL CONSTRUCTION NOTES

Carriageway construction design is based upon an assumed CBR value of 1.0%

Final carriageway specification will be determined following a site investigation in accordance with BS 5930 (1981)

IMPORTANT NOTE

Ground investigation reveals that part of the site is affected by the presence of peat.

Where the access road is located in such areas, the peat strata is to be completely removed and approved fill material provided to carriageway formation level.

Refer to the Site Investigation Report, No. 3009SA prepared by Ashdown Site Investigation Ltd., for full details of existing ground conditions.

CARRIAGEWAY CONSTRUCTION

40mm thick Close Graded Macadam wearing course (10mm nominal size) to BS 4987 Clause 7.4

110mm thick Dense Macadam base course (20mm nominal size) to BS 4987 Clauses 7.2 & 9.1

300mm thick D.Tp Type 1 granular sub base

330mm thick Granular Material to Clause 6.8

Terram 2000 geotextile membrane or a similar product approved by the Highway Authority to be provided at formation level.

Fill Areas

Fill material shall comply with Clauses 613-615 (Class 6F1) of the D.Tp Specification for Highway Works and Clause 6.8 of the Lincolnshire County Council document Development Road Specification and Construction 1999.

Actual material used shall be subject to the final approval of the Highway Authority.

DOMESTIC VEHICLE CROSSING CONSTRUCTION

25mm thick Dense Bitumen Macadam wearing course (6mm nominal size) to BS 4987 Clause 7.5

100mm thick Dense Bitumen Macadam base course (20mm nominal size) to BS 4987, Clause 6.5

150mm thick D.Tp. Type 1 granular sub base

Terram 2000 geotextile membrane or a similar product approved by the Highway Authority to be provided at formation level.

HIGHWAY VERGES

Land contained by forward visibility splays forming part of the adoptable highway, to be defined by a continuous edging (as Kerb Detail - Type 3).

All such areas to have a minimum compacted thickness of 100mm of topsoil and to be grass seeded or turfed in accordance with Clause 6.3.

MINOR ACCESS ROAD CONSTRUCTION DETAIL - ROAD 1

Scale - N.T.S.

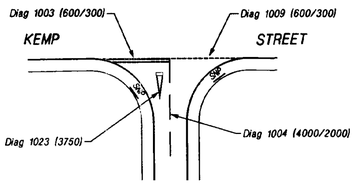

ROAD MARKING LAYOUT

Scale 1:500

SIGNAGE NOTES

General

1 All traffic signs and road markings should be erected in accordance with the TRAFFIC SIGNS REGULATIONS AND GENERAL DIRECTIONS 1994 (Regulations).

Road Markings

1 Road markings are to be provided to the proposed roads of the development as shown on the layout.

2 Road markings shall be reflectorised thermoplastic material in accordance with BS 3262 or, in the case of block paved areas, an approved roll marking tape.

3 Reference should be made to Schedule 6 of the Regulations for the precise size and arrangement of the proposed road markings which are identified on the layout by the appropriate Diagram Number. The required size of the particular road marking is shown in brackets following the Diagram Number.

4 All road markings are to be set out on site and their final arrangement agreed with the Highway Authority prior to thermoplastic material being laid.

Street Nameplates

1 Street nameplates (SNP) are to be provided at the junction of each named road as shown on the layout.

2 Street nameplates are to be of an approved design and manufactured and erected in accordance with the requirements of South Holland District Council. They shall incorporate a 'no through road' symbol, as shown in diagram 3161 of the Regulations, where appropriate.

3 The precise location of each nameplate is to be determined on site and agreed with the Highway Authority prior to erection.

4 The Contractor should ensure that street nameplates are not erected within visibility splays or other such locations likley to cause an obstruction.

Notes:

1 All adoptable highway works are to be in accordance with Lincolnshire County Council's documents 'Lincolnshire Design Guide for Residential Areas and Development Road Specification and Construction 1991.

IMPORTANT NOTE

The Contractors attention is drawn to the necessity of determining whether or not sulphate resisting cement is required for use in concrete and mortar products. Relevant consultation MUST be made with the adopting Authority regarding this matter PRIOR to works commencing on site. This note applies whether existing soil conditions are aggressive or not.

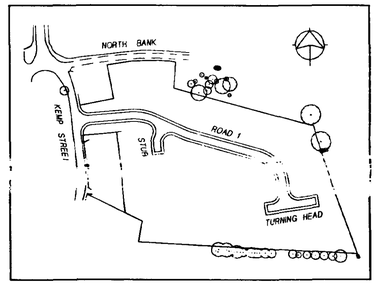

SCHEMATIC ROAD LAYOUT

Scale - NTS

Rev. No.	Revision	Date	Drawn
A	Note regarding testing to BS5930 added to road section	15.06.99	DLH
B	SNPs noted to SHDC approval. Tactile paving revised.	15.06.99	DLH
C	Concrete specification revised.	27/9/99	DLH

TRIBRACH ASSOCIATES
consulting civil & structural engineers
14 Eversley Road, Bexhill on Sea, East Sussex, TN40 1EU
Tel: (01424) 216214 Fax: (01424) 734284

Client: ABBEY DEVELOPMENTS LTD.

Project: KEMP STREET
CROWLAND, LINCOLNSHIRE

Drawing: TYPICAL ROAD CONSTRUCTION DETAILS

Scales
Horizontal: As Shown
Vertical:
Date: May 1999

DRAWING No: 99215/5 Rev. C

SOUTH HOLLAND DC
HOUSING & PLANNING
03 SEP 2001
Ref: 1062/01

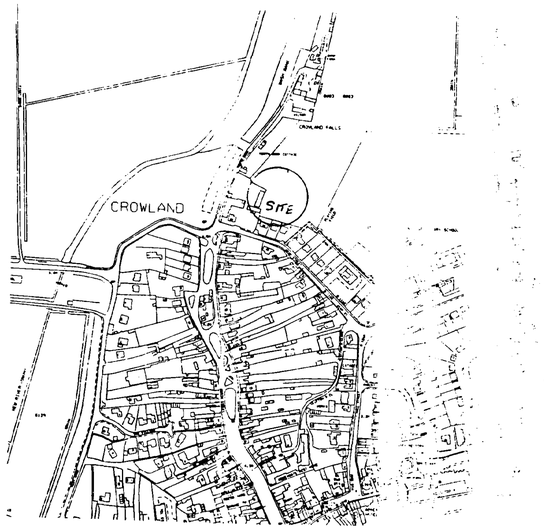

NOTES

A Design Risk Assessment has been carried out by Anglian Water Services Ltd, from the design of the proposed new water main.

All work to conform to the latest relevant Anglian Water British Standard, Code of Practice and Legislation.

The information shown on this drawing is based on the best available information but this position must be regarded as approximate.

The actual position of all apparatus **MUST** be established on site before any mechanical plant is used.

No liability whatsoever is accepted for any error or omission.

Service Ducts	- - - d - - -
Mains Ducts	900mm Cover
Service Ducts	750mm Cover
Service Duct Size	Single 50mm
Service Duct Size	Double 100mm

LEGEND — Water Main

EXISTING	SV WO FH
PROPOSED	
63mm MDPE	
90mm MDPE	
125mm MDPE	
180mm MDPE	
225mm MDPE	
To Be Decommissioned	SAV DAV

SOUTH HOLLAND DC
HOUSING & PLANNING
03 SEP 2001
Ref: 1062/01

DRAWING STATUS

INFORMATION	☐
FOR APPROVAL	☐
TENDER	☐
CONSTRUCTION	☐
RECORD	☐
OTHER	☐

CLIENT: **ABBEY DEVELOPMENT**

SITE REFERENCE CODE:

REV	DETAILS	BY	DATE	CHK	APP
D					
C					
B					
A	INSTALL FIRE HYDRANT	LL	16/7/01	DMB	DMB

THIS DRAWING IS COPYRIGHT AND THE INFORMATION CONTAINED WITHIN IT IS CONFIDENTIAL AND MAY NOT BE DISCLOSED TO THIRD PARTIES WITHOUT THE WRITTEN PERMISSION OF ANGLIAN WATER SERVICES LTD.

Anglian Water
ANGLIAN WATER SERVICES LTD.
FENLAND MAINLAYING
SALTERSFORD WTW, GRANTHAM, NG31 7UL
Tel 01476 447446 Fax 01476 447447

PROJECT TITLE: **WATER MAINS EXTENSION**

DLS/WM/C/060

DRAWING TITLE: **REAR 23 KEMP STREET**

CROWLAND

SURVEYED	DRAWN LL	DESIGNED LL
CHECKED LL	APPROVED CBL	DATE 16/7/01

SCALES:- 1:500

DRAWING No:- 00826 / 21 REV A

JOB No:- 7198158