

FRONT ELEVATION

SIDE ELEVATION

N.B. Refer to main dwelling for elevation treatment

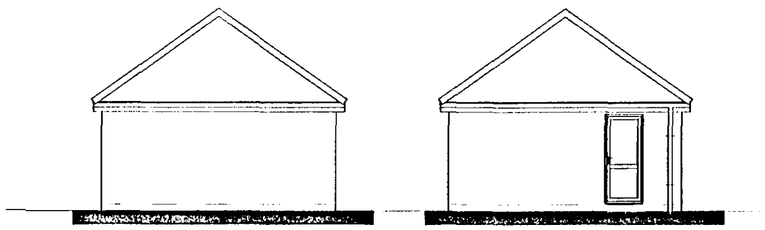

REAR ELEVATION

SIDE ELEVATION

CONSTRUCTION NOTES

GROUND PREPARATION - Strip all top soil/vegetable matter from area occupied by buildings plus 2m all round, provisionally allow 150mm depth and store in site stockpile for later reuse. Reduce levels/grade oversite to levels indicated on site plans.

FOUNDATIONS - Unless otherwise stated, strip foundations to be 450/650mm wide of C15P mix concrete. Depth to suit site conditions, subject to 700mm min depth (1000mm on clay) and to the approval of the Local Authority Building Inspector.

GROUND FLOOR CONSTRUCTION - Insitu concrete ground bearing slabs to be 100mm thickness C20P mix concrete on 1200 gauge DPM (300mm laps) on 150mm sand blinded clean hardcore (max 600mm filling below slab). DPM to be turned up and over all walls and overlaid with DPC.

SUB-STRUCTURE WALLS - Class A blocks of FL quality bricks in 1:3 mix mortar. Fill cavities to within 225mm of lowest DPC with 1:10 mortar or lean mix concrete.

EXTERNAL WALLS - Made up of 105mm facing brickwork. Cavity walls between house and garage as external walls. Solid walls of 200mm Tarmac Topflite G11 or similar lightweight blocks in 1:6 mortar (K value 0.11 w/mk) to give U value of 0.48w/m degrees Celsius.

ROOF COVERING - Concrete interlocking, concrete/clay plain tiles or traditional/fibre cement slates with ridges/verges/special fittings all as site specification. 38 x 25mm treated SW battens gauge to suite tiling on BS747 type 1F untearable roofing felt or similar on cut/trussed rafters as applicable. Contractor is to determine tile fixing specification from manufacturers published literature with due consideration for each site location, anticipated wind velocities and individual roof pitches. Roofing contractor to fix mineral fibre quilt fire stopping above and below roofing felt to head of party walls and fire stop eaves boxes in strict accordance with manufacturers written instructions.

ROOF CONSTRUCTION - Wall plates generally 100 x 50mm treated SV, with half lapped joints and fully bedded, strapped down to supporting wall with 30 x 5mm GMS straps at 1.0m cc's. Cut pitch rafters to be fully birdsmouthed over 4 twice nailed to manufacturer and fixed together with 100 x 25mm sawn SW binders and bracing, in strict accordance with BS5268 part 3 1985 (and any subsequent amendment) at 600mm max centres. Provide 3/ x 5mm once bent (900/100) galvanised mild steel lateral restrain straps to external walls at ceiling and rafter level where shown at 2m max cc's) fixed with 4 no. 50mm 8 gauge CSK screws or 5 no. 3.5 x 50mm galvanised round wire nails to 2 trusses/ceiling joists min C/W solid blocking support and edge packing.

ROOF SPACE VENTILATION AND INSULATION - Provide eave to eave ventilation equivalent to 10,000mm? /metre run or where eaves is dropped. 25,000mm?/metre run, together with high level vents giving 5000mm?/metre run (use tile manufacturers dry ridge ventilator system). Use either ventilating sofit boards, continuous sofit ventilation strips or continuous over fascia ventilation strips as site specification.

RAINWATER GOODS - 115mm dia HR or 100mm square line UPVC guttering, fixed level using standard fascia brackets at 1000mm cc's and 68mm dia/65mm square RWP's sealed to drain at ground level. Colour/profile as site specification.

FOUL AND STORM DRAINAGE - Generally foul drainage to connect to foul sewer lateral and rainwater to discharge to rubble filled soakaways, but refer to drainage layout plan on a site by site and plot by plot basis.

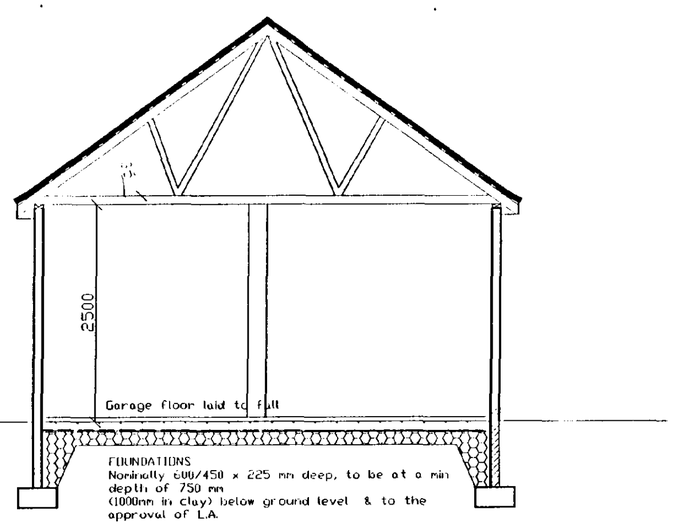

SECTION A - A

OPENING	FRAME	LINTEL	LENGTH
1	Purpose made	CN71A	2550
2	Purpose made	CN71A	2550
3	2/F	CN48C	1200

Lintols by Catnic Ltd

ROOF TRUSS SCHEDULE

A 2No Compound girder of Flat Top Trusses 5410 clear span.
B 2No Flat top trusses 5410 clear span.
C 1No Fink truss 5410 clear span.
D 10 No Mono pitch trusses.

35 Degree pitch
200mm overhang

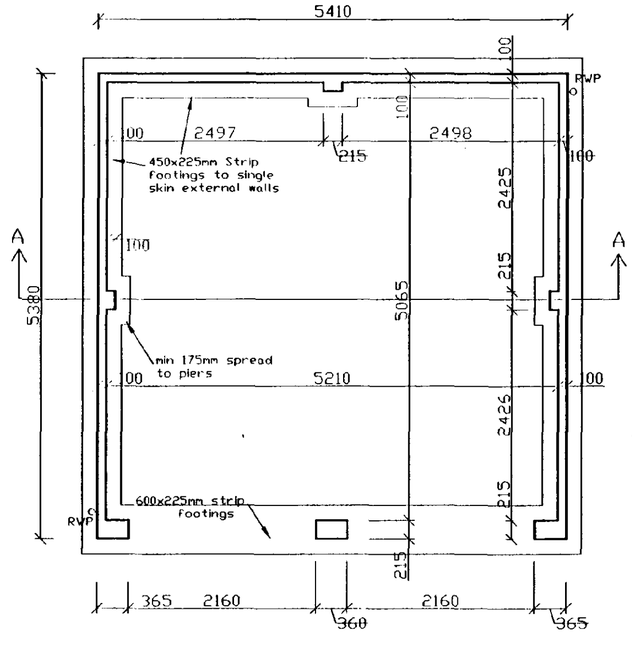

FOUNDATION PLAN

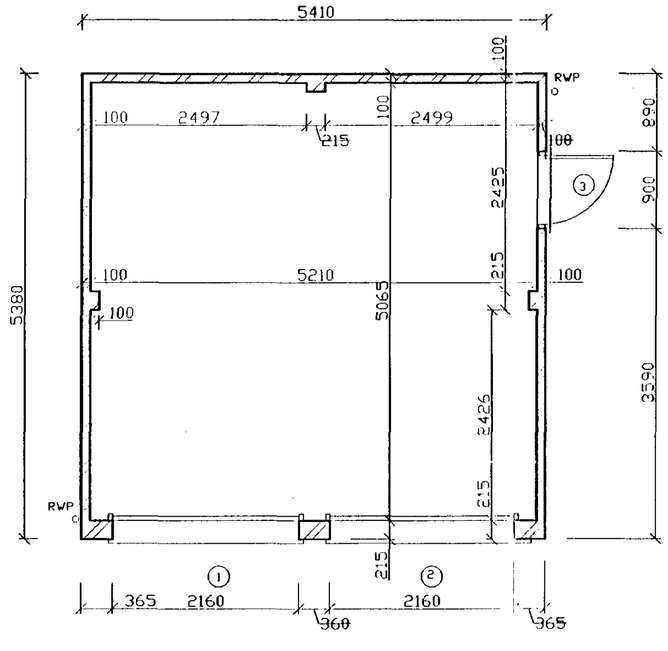

FLOOR PLAN

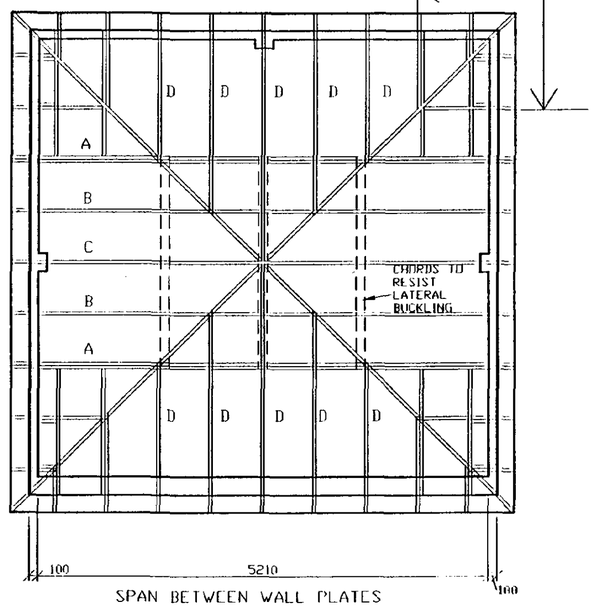

SPAN BETWEEN WALL PLATES

TRUSS LAYOUT

Date :	Description :		
15/05/00	Infill timber sizes amended	A	JB

R E V I S I O N S

Swallow House, Banbury Close, West Elloe Avenue, Spalding, Lincs. PE11 2BS
Telephone : (01775) 724701 Fax : (01775) 762153
ALLISON HOMES is a trading name of SWALLOW HOMES LTD

Project :
DOUBLE DETACHED GARAGE

Drawing Title :
CONSTRUCTION DRAWING

Reference No :

Drawing No :
W/DDG/03

Scales :
1:50, 1:100

Date :
JULY '99

Drawn
J.r.b.

Do not scale directly from this drawing. All discrepancies to be brought to the attention of the above office.

SOUTH ... DC
HOUS... NG
09 JUN 2000
Ref: 0739/00