WALL MOUNTING SYSTEM

The WL-4 Wall Mounting System is engineered to handle a 4'(1.2M) antenna. The simple design and hot dip galvanized finish combine to make the WL-4 an easy to install, durable and inexpensive wall mount.

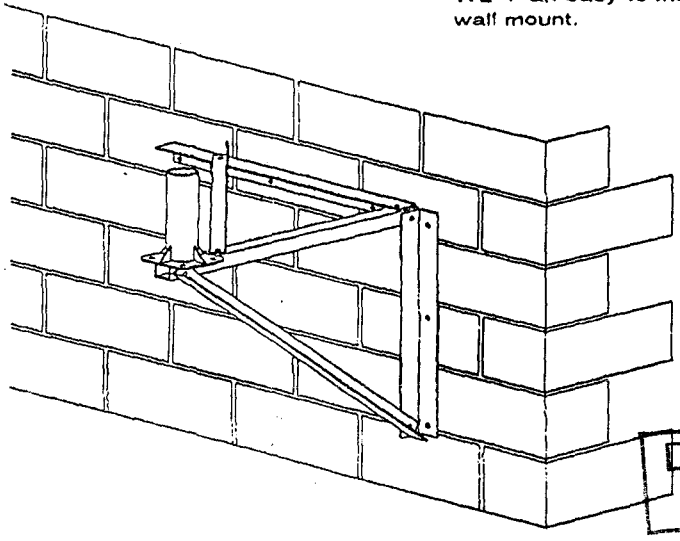

DETERMINED
PLAN

SOUTH HOLLAND
HOUSING & PLANNING
1998
0413/96

SATELLITE

SUPPORTING SYSTEMS

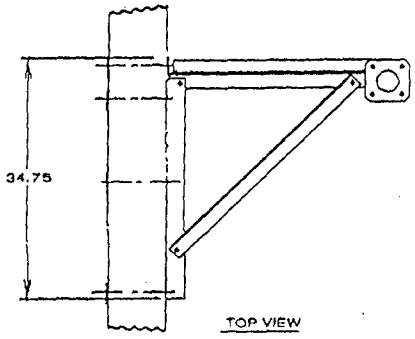

TOP VIEW

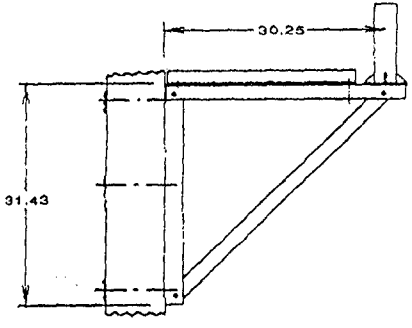

SIDE VIEW

PRODUCT SPECIFICATIONS
MODEL: WL-4

TYPICAL USAGE:

Handles up to a 4' (1.2M) antenna
C band and Ku band- transmit and receive

Finish-Hot dip galvanized
Pipe diameter- up to 3-1/2"OD
Pipe Height- 1'
UPS shippable

The WL-4 wall mount may be set up as a right-hand mount(shown) or as a left-hand mount(mirror image of top view)

MOUNTING

The mount must be fastened securely to the wall. The following are some options for mounting the WL-4.

1.) WL-4 Wall Mounting Kit-Baird has an optional mounting kit(shown at left) available for the WL-4. The kit contains 1/2"x16"Threaded rod bolts, backplates and nuts. It requires holes to be drilled through the wall and backplates to be placed on the inside.

2.) For concrete walls- 1/2"dia. concrete anchors installed per the manufacturer's instructions.

3.) For wood frame walls- 1/2" lag bolts-INTO THE WALL STRUCTURE- DO NOT lag bolt to just the sheathing.

We recommend a structural engineer review the application of this product.

DETERMINED
PLAN

SYM.	DESCRIPTION	MATERIAL	QTY
1	SUPPORT ANGLE	.18X2X2 L X 29.5"	3
2	CROSS BRACE	.12X1.5X1.5 L X 38"	3
3	WALL ANGLE	.18X2X2 L X 28.0"	3
4	MAST	3"OD X.18W X 10'	1
5	U-BOLT	.50"DIA. X 3"	3
6	"	.50 X 1.25" BOLT	9
7		.50" NUT	15
8		.50" LOCKWASHER	15

DELETED PLAN

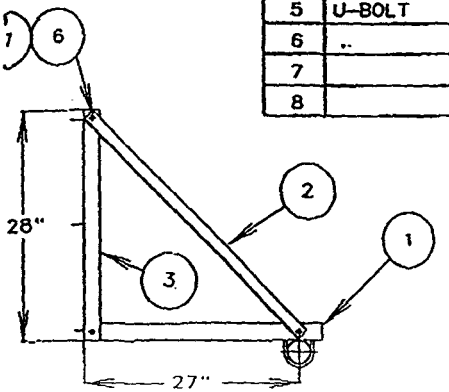

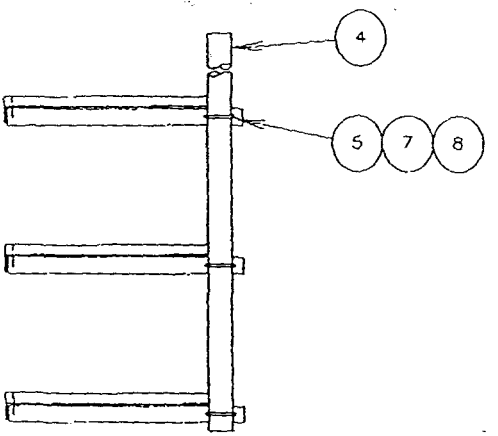

WALL MOUNTING HARDWARE NOT INCLUDED

This drawing and the information contained therein are the property of BAIRD SATELLITE SYSTEMS and may be used by others only as authorized by us. All rights reserved.

DIMENSIONS IN INCHES

BAIRD SATELLITE
WATERLOO, IOWA

CUSTOM WALL BRACE

DRAWN BY: JMK		WEIGHT:
SCALE: 1:15	DATE: 6/14/94	DRAWING NO.

1.2m SMC DTH Antenna

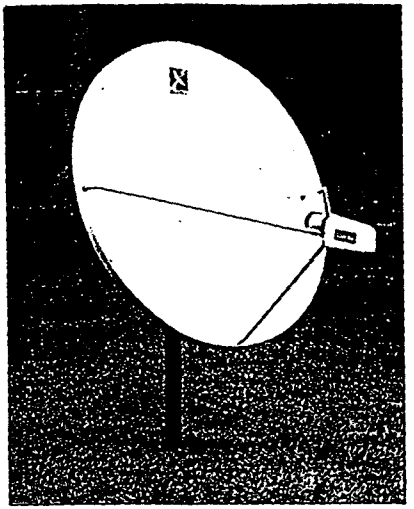

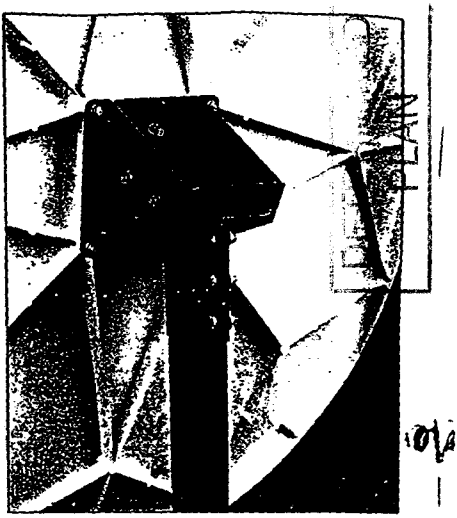

Model 6022

Maximum gain for fringe reception

The Channel Master® DTH satellite antenna system offers the perfect choice for everyone.

This 1.2m SMC (sheet molded compression) antenna offers maximum gain to capture satellite signals clearly even on the fringe of the normal signal area. Its design and fiberglass reinforced molded polyester construction offer perfect parabolic shape and surface. The sturdy tri-leg feed support maintains optimal feed assembly position for consistently excellent performance.

Choose one of four high-gain feed options — Polarizer, Single Polarity, Orthomode Transducer, or LNBF — to meet your viewing needs. A weatherproof feed cover and sturdy die cast construction helps extend the life of these precision prime focus offset feeds.*

To get the most from this powerful antenna, the Channel Master system offers a choice of either heavy-duty fixed AZ/EL mounts or a motorized polar mount for quick satellite selection. There's a variety of mounting options, too — just like our smaller antennas, the 1.2m can be mounted on flat or sloped roofs, vertical walls or on a 76mm ground pole. All mounting hardware is cadmium dichromate plated and the steel mount parts are powder coat painted or galvanized for corrosion resistance. It's just what you'd expect from the number one name in antennas since 1949.

SPECIFICATIONS

Effective Aperture:	1.2m Dia., 120cm
Dish Height:	1.3m
Dish Width:	1.2m
Frequency Range:	10.95 - 12.75 GHz
Gain at Mid Band:	10.95 - 11.7 GHz 41.6dB; 11.7 - 12.5 GHz 42.2dB; 12.5 -12.75 GHz 42.6dB
Temperatures:	-40°C to +50°C (Survival -58°C to +70°C)
F/D:	.6
Offset Angle:	22.6°
Polarization:	Linear, Circular
Optics:	Prime Focus with Offset Feed
Feed Options:	Polarizer, Single Polarity, Orthomode Transducer, or LNBF
Mounts:	Polar or AZ/EL
Mount Assemblies:	(3.0" [76mm] Dia.), Ground, Roof, Wall. (Refer to Channel Master Mount Literature.)
Windloading:	96km (Survival 193km)
Hardware:	700 hour salt spray tested

**LNBF is hermetically sealed and does not require a feed cover.*

Channel Master®

WALL MOUNTING SYSTEM

The WL-4 Wall Mounting System is engineered to handle a 4'(1.2M) antenna. The simple design and hot dip galvanized finish combine to make the WL-4 an easy to install, durable and inexpensive wall mount.

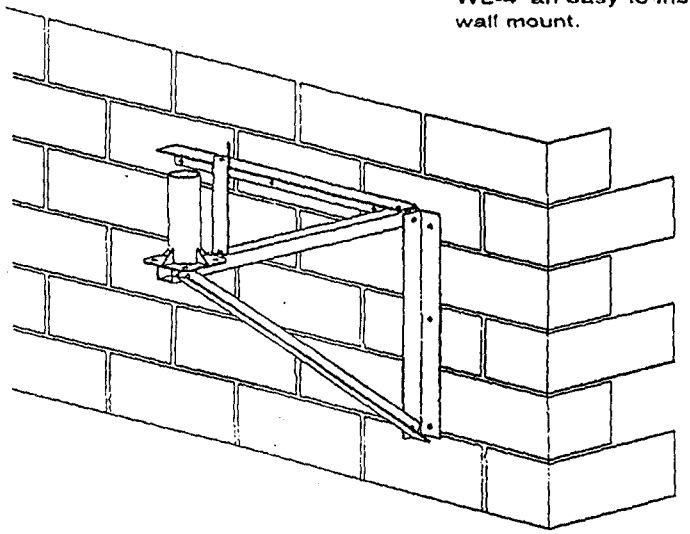

7 MAY 1996
0413/96

SATELLITE

SUPPORTING SYSTEMS

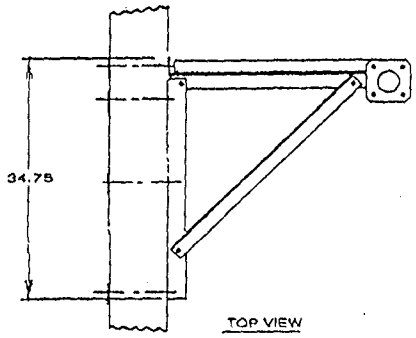

TOP VIEW

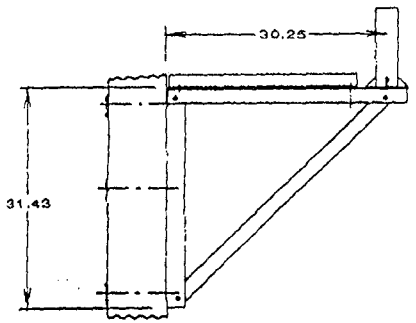

SIDE VIEW

PRODUCT SPECIFICATIONS

MODEL: WL-4

TYPICAL USAGE:

Handles up to a 4' (1.2M) antenna
C band and Ku band- transmit and receive

Finish-Hot dip galvanized
Pipe diameter- up to 3-1/2"OD
Pipe Height- 1'
UPS shippable

The WL-4 wall mount may be set up as a right-hand mount(shown) or as a left-hand mount(mirror image of top view)

MOUNTING

The mount must be fastened securely to the wall. The following are some options for mounting the WL-4.

1.) WL-4 Wall Mounting Kit-Baird has an optional mounting kit(shown at left) available for the WL-4. The kit contains 1/2"x16"Threaded rod bolts, backplates and nuts. It requires holes to be drilled through the wall and backplates to be placed on the inside.

2.) For concrete walls- 1/2"dia. concrete anchors installed per the manufacturer's instructions.

3.) For wood frame walls- 1/2" lag bolts-INTO THE WALL STRUCTURE- DO NOT lag bolt to just the sheathing.

We recommend a structural engineer review the application of this product.

SYM.	DESCRIPTION	MATERIAL	QTY
1	SUPPORT ANGLE	.18X2X2 L X 29.5"	3
2	CROSS BRACE	.12X1.5X1.5 L X 38"	3
3	WALL ANGLE	.18X2X2 L X 28.0"	3
4	MAST	3"OD X.18W X 10'	1
5	U-BOLT	.50"DIA. X 3"	3
6	"	.50 X 1.25" BOLT	9
7		.50" NUT	15
8		.50" LOCKWASHER	15

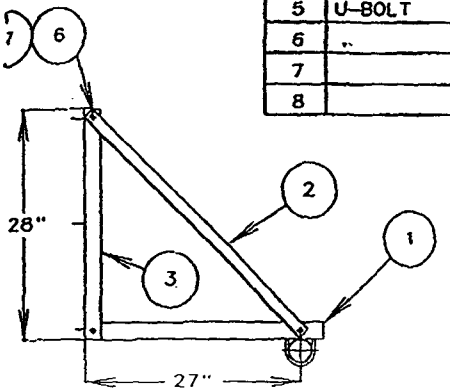

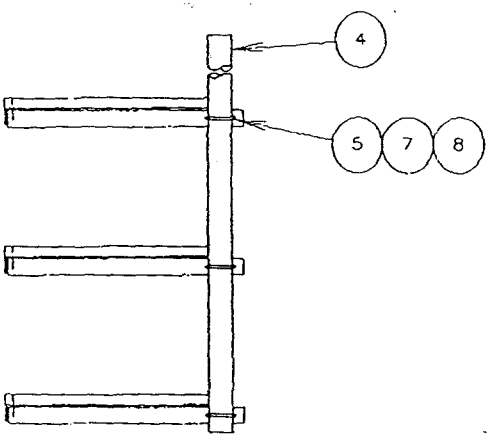

WALL MOUNTING HARDWARE NOT INCLUDED

This drawing and the information contained therein are the property of BAIRD SATELLITE SYSTEMS and may be used by others only as authorized by us. All rights reserved.

DIMENSIONS IN INCHES

BAIRD SATELLITE WATERLOO, IOWA		
CUSTOM WALL BRACE		
DRAWN BY: JMK		WEIGHT:
SCALE: 1:15	DATE: 6/14/94	DRAWING NO.

1.2m SMC DTH Antenna

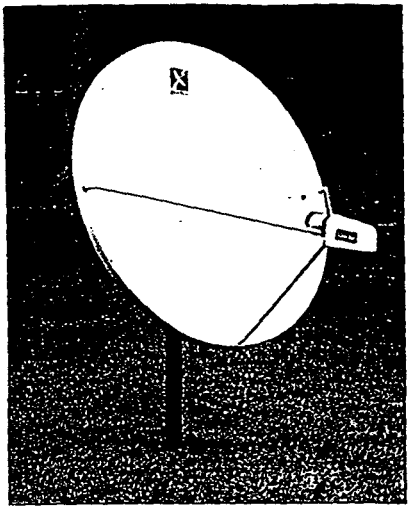

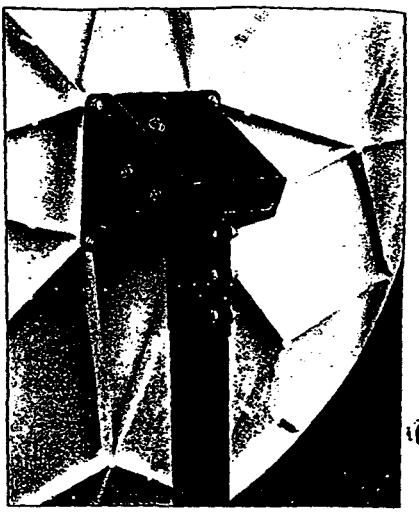

Model 6022

Maximum gain for fringe reception

The Channel Master® DTH satellite antenna system offers the perfect choice for everyone.

This 1.2m SMC (sheet molded compression) antenna offers maximum gain to capture satellite signals clearly even on the fringe of the normal signal area. Its design and fiberglass reinforced molded polyester construction offer perfect parabolic shape and surface. The sturdy tri-leg feed support maintains optimal feed assembly position for consistently excellent performance.

Choose one of four high-gain feed options — Polarizer, Single Polarity, Orthomode Transducer, or LNBF — to meet your viewing needs. A weatherproof feed cover and sturdy die cast construction helps extend the life of these precision prime focus offset feeds.*

To get the most from this powerful antenna, the Channel Master system offers a choice of either heavy-duty fixed AZ/EL mounts or a motorized polar mount for quick satellite selection. There's a variety of mounting options, too — just like our smaller antennas, the 1.2m can be mounted on flat or sloped roofs, vertical walls or on a 76mm ground pole. All mounting hardware is cadmium dichromate plated and the steel mount parts are powder coat painted or galvanized for corrosion resistance. It's just what you'd expect from the number one name in antennas since 1949.

SPECIFICATIONS

Effective Aperture:	1.2m Dia., 120cm
Dish Height:	1.3m
Dish Width:	1.2m
Frequency Range:	10.95 - 12.75 GHz
Gain at Mid Band:	10.95 - 11.7 11.7 - 12.5 12.5 -12.75 41.6dB 42.2dB 42.6dB
Temperatures:	-40°C to +50°C (Survival -58°C to +70°C)
F/D:	.6
Offset Angle:	22.6°
Polarization:	Linear, Circular
Optics:	Prime Focus with Offset Feed
Feed Options:	Polarizer, Single Polarity, Orthomode Transducer, or LNBF
Mounts:	Polar or AZ/EL
Mount Assemblies:	(3.0" [76mm] Dia.), Ground, Roof, Wall. (Refer to Channel Master Mount Literature.)
Windloading:	96km (Survival 193km)
Hardware:	700 hour salt spray tested

*LNBF is hermetically sealed and does not require a feed cover.

Channel Master®

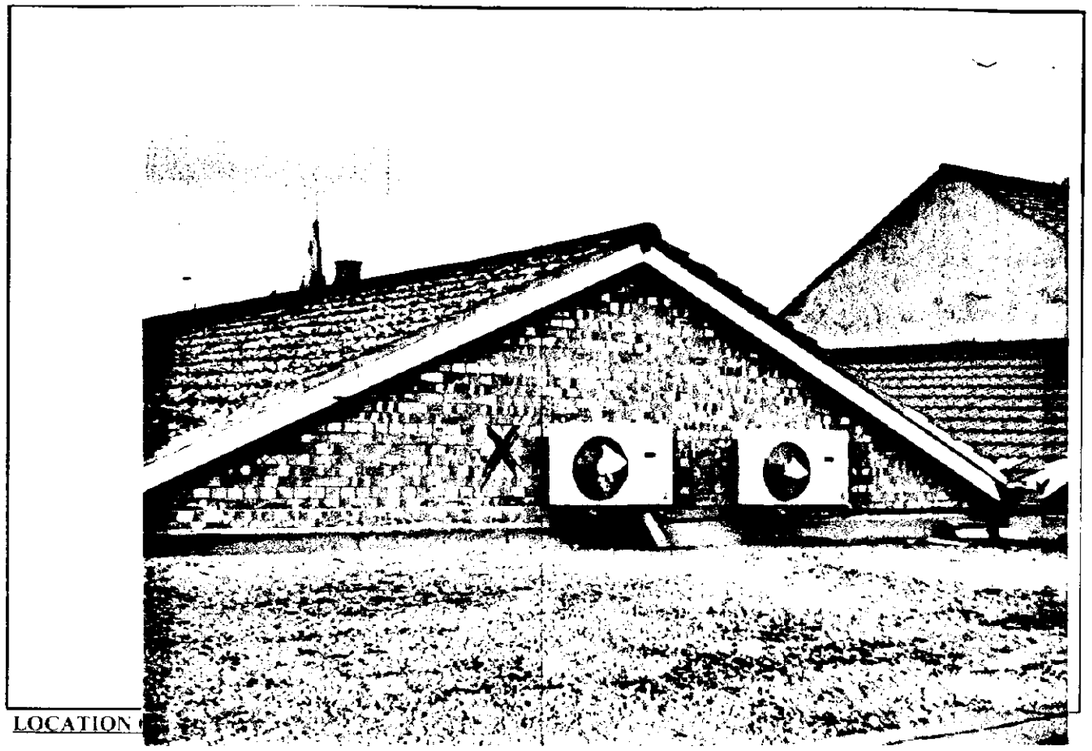

LOCATION

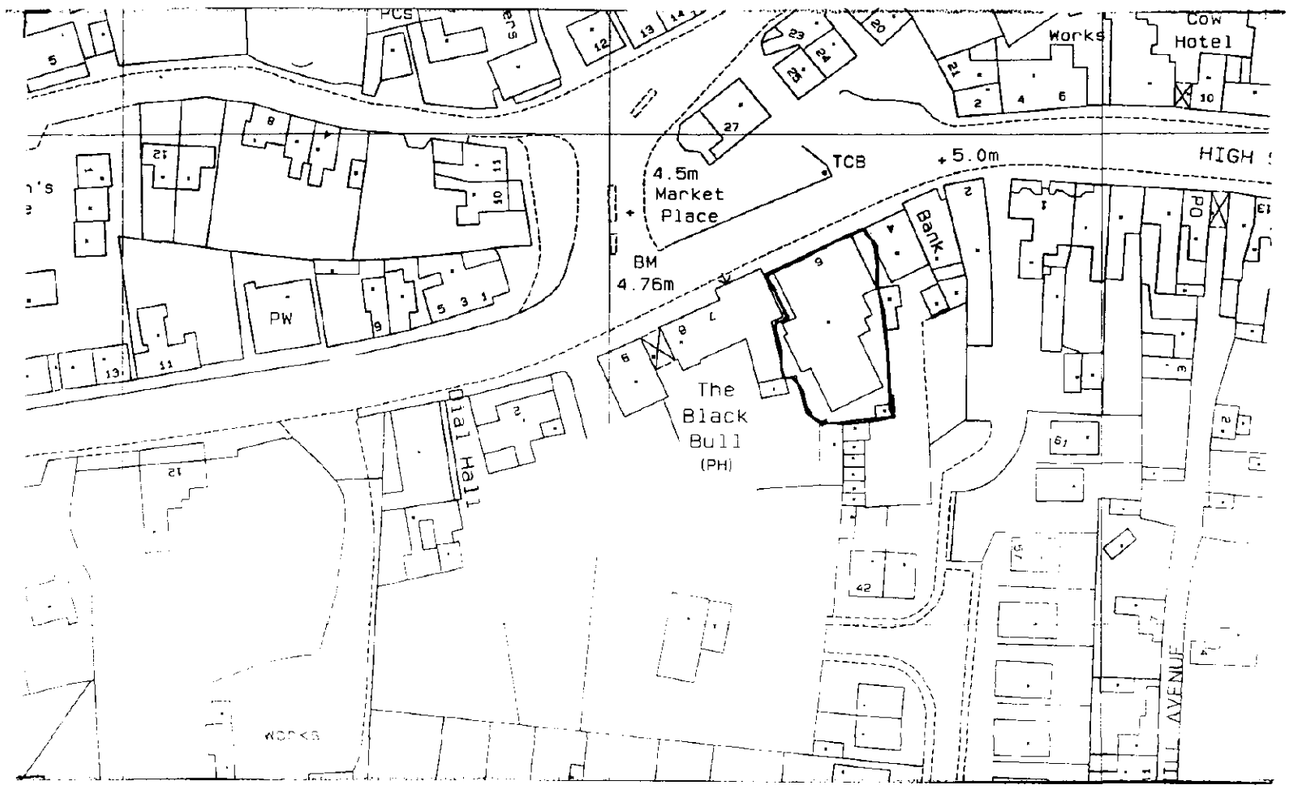

SCALE: 1:1250



FRONTAL ELEVATION OF BUILDING

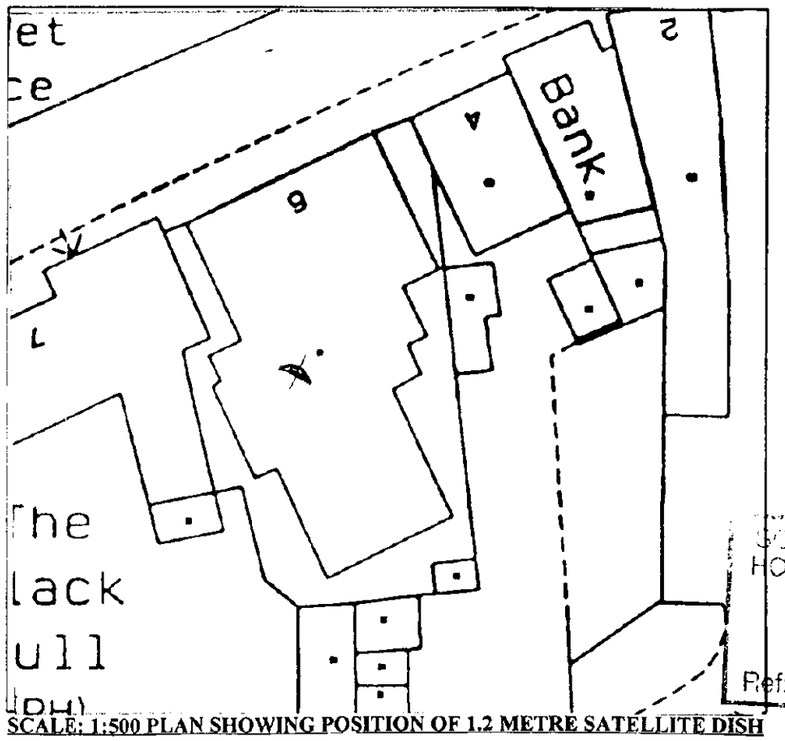

SCALE: 1:500 PLAN SHOWING POSITION OF 1.2 METRE SATELLITE DISH

RACAL

FS 25426

Racal Network Services Limited
Oakwood, Chineham Business Park
Crockford Lane, Basingstoke
Hampshire RG24 8WB, England
Telephone: (01256) 700100
Fax: (01256) 700110

CO-OP LATE SHOP
MARKET PLACE
DONINGTON
SPALDING
LINCS

REF : 251929

SOUTH KESTEVEN DC
HOUSING & PLANNING
- 7 MAY 1996
Ref: 0413/96

Registered Office: Western Road, Bracknell, Berkshire RG12 1RG, England
Registered in England No. 2089583

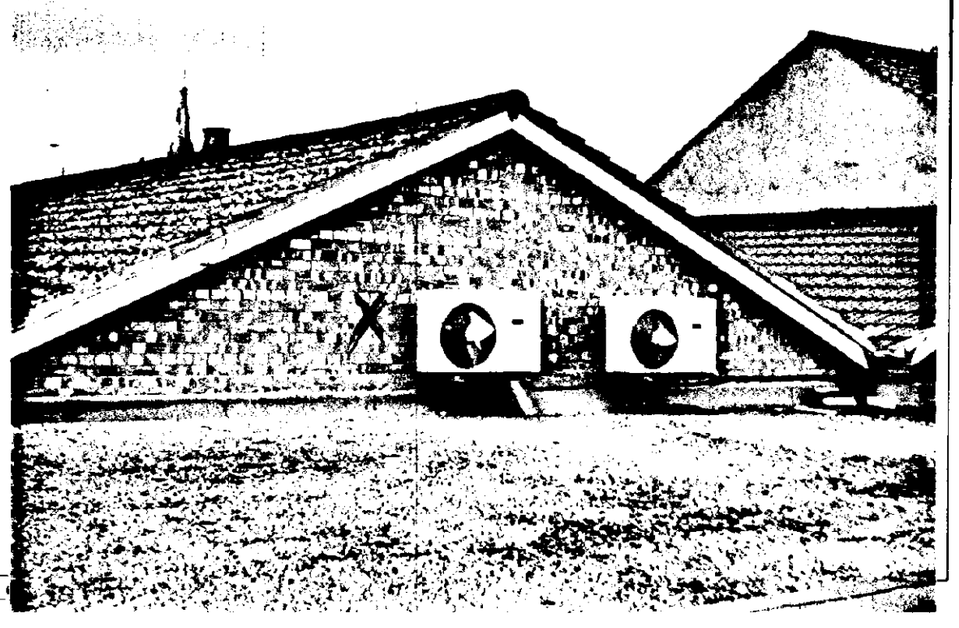

LOCATION



FRONTAL ELEVATION OF BUILDING

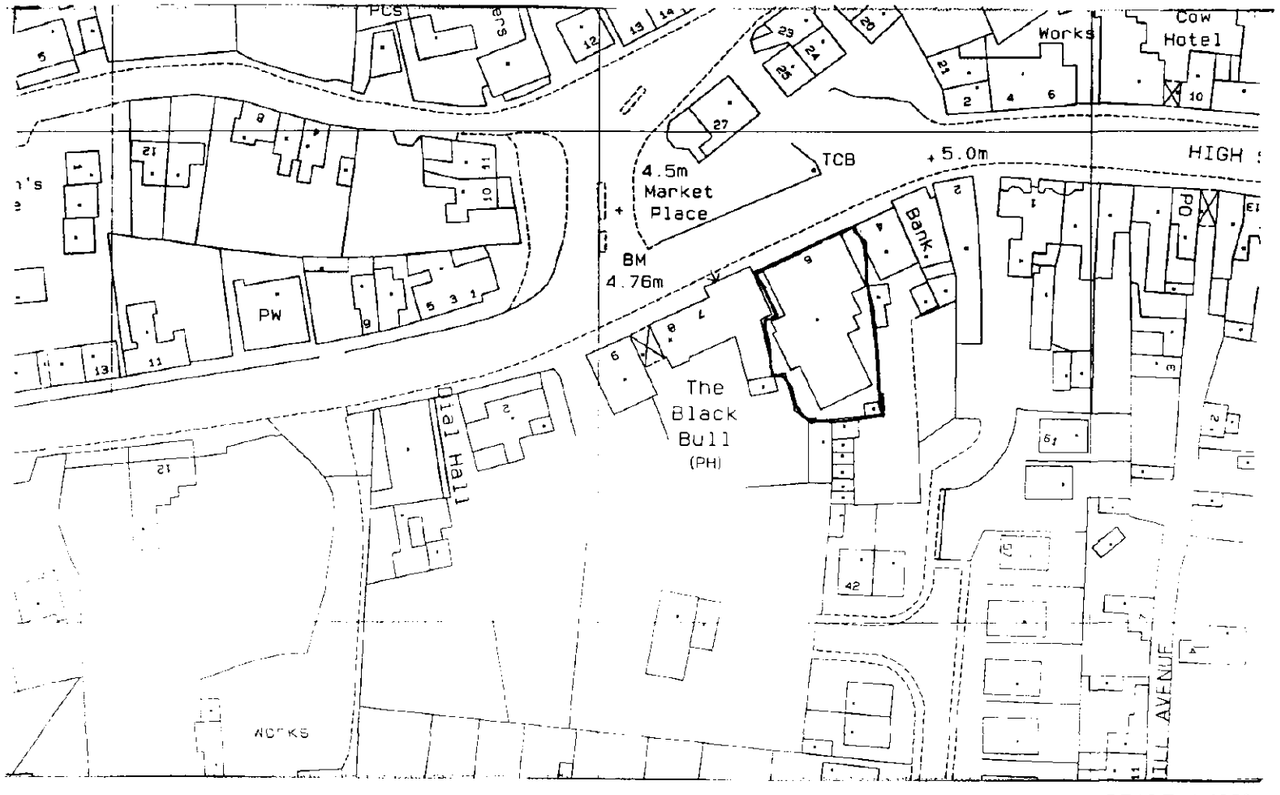

SCALE: 1:1250

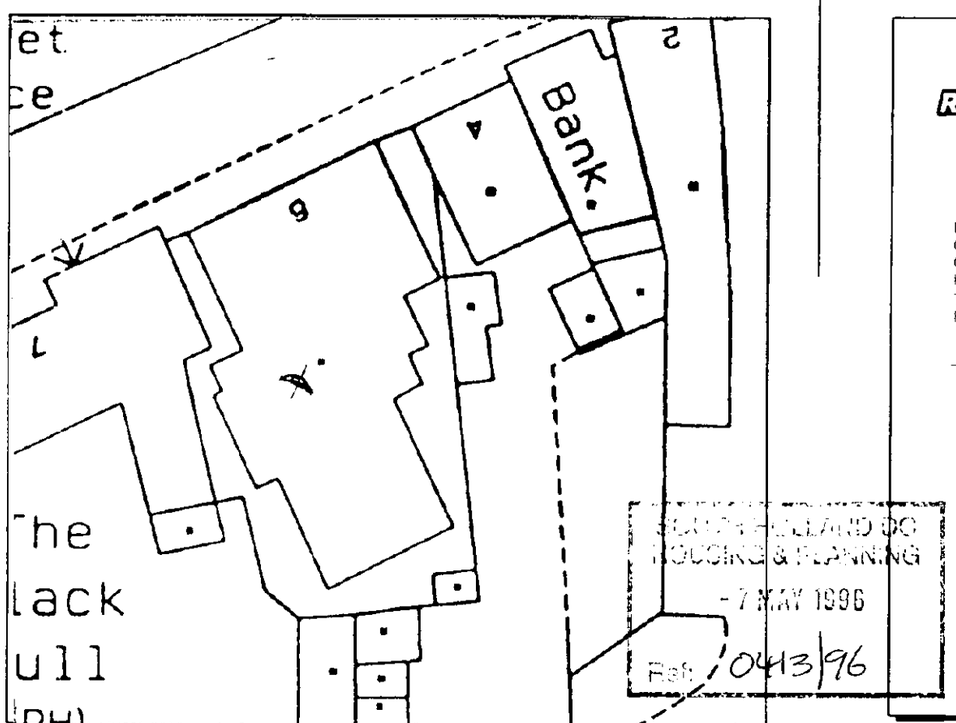

SCALE: 1:500 PLAN SHOWING POSITION OF 1.2 METRE SATELLITE DISH

RACAL

FS 25426

Racal Network Services Limited
Oakwood, Chineham Business Park
Crockford Lane, Basingstoke
Hampshire RG24 8WB, England
Telephone: (01256) 700100
Fax: (01256) 700110

CO-OP LATE SHOP
MARKET PLACE
DONINGTON
SPALDING
LINCS

REF : 251929

SOUTH HOLLAND DC
HOUSING & PLANNING
- 7 MAY 1996
Ref: 0413/96

Registered Office: Western Road, Bracknell, Berkshire RG12 1RG, England
Registered in England No. 2089583