

Macadam Pathways. 1:20

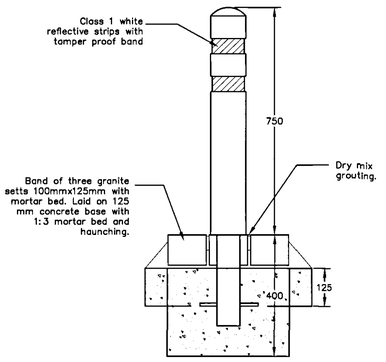

Fixed 'Gayton' Bollard and Sett Detail. 1:10

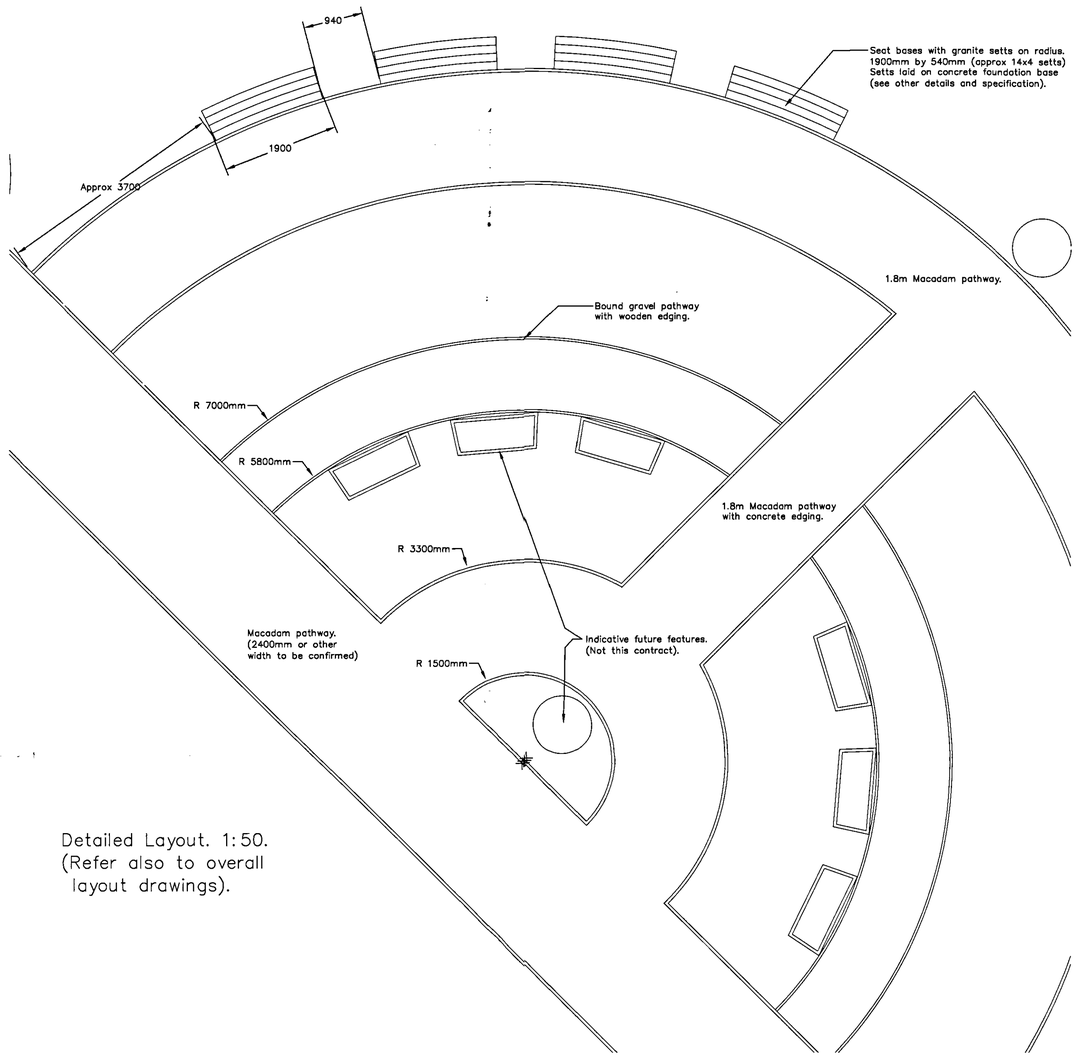

Detailed Layout. 1:50. (Refer also to overall layout drawings).

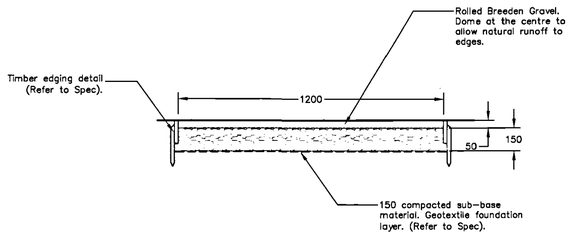

Gravel Footpath – 'Woodland' and Chronometer Garden. 1:20

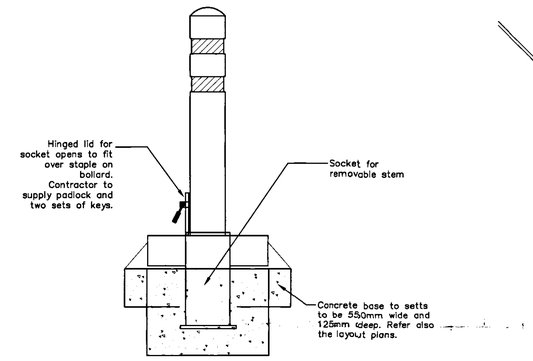

Removable 'Gayton' Bollard and Setts. 1:10

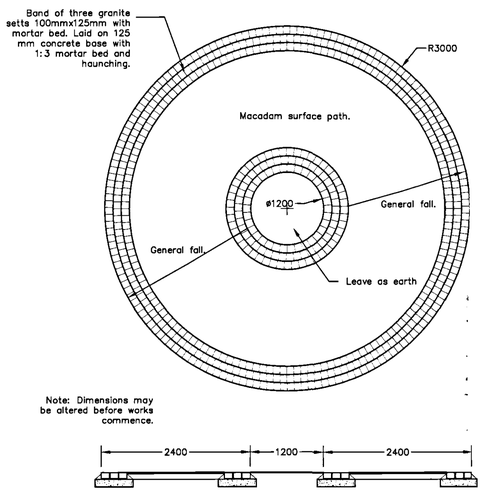

Granite Sett Details at 'Junction Circles'. 1:50

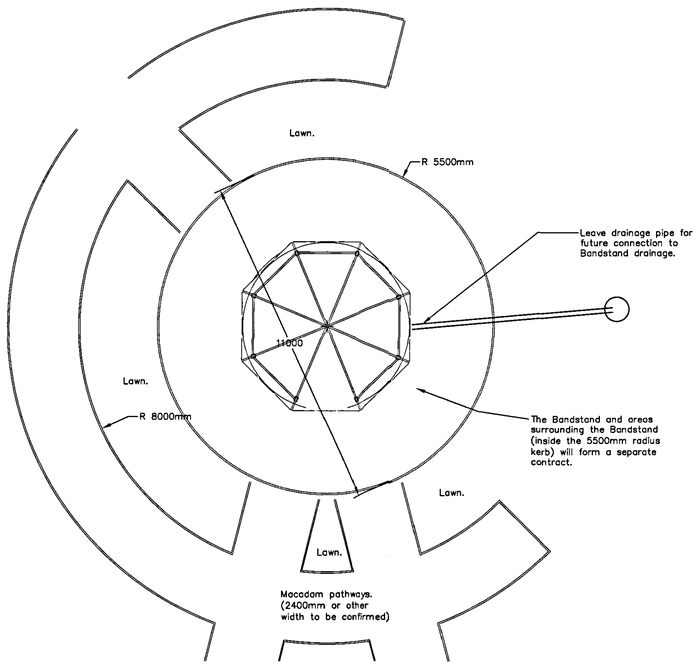

Detailed Layout. 1:100. (Refer also to overall layout drawings).

SHDC
PLANNING & DEVELOPMENT
- 6 DEC 2006
Ref. 1689/06

Rev	Amendment	Ch'kd

richard morrish associate
landscape design + environmental planning
2 Guanock Place, King's Lynn
Norfolk PE30 5QJ www.rmassoc.co.uk
Tel: 01553 660122 e-mail: enquiries@rmassoc.

client :
Improving Doningtons Environment for All

job :
Donington Flinders Park (Phase 1)
Paths and Groundworks – Contract 2

drawing :
Contract 2: Various Details

Drawn	Date	Proj. No.
RM	November 2006	82/05 Ph1
Chckd	Scale	Dwg No.
RM	As shown	DFP/Con 2/0