From: Lucy Davies <Lucy.Davies@dalcourmaclaren.com>
Sent: 10 October 2025 10:13
To: Pinna-Morrell, Gillian; Atkinson, Nick
Cc: _planningadvice
Subject: RE: Application reference H05-0439-25: Land west of Branches Lane, Holbeach

Attachments: Spalding and South Holland 33 kV.pdf

Follow Up Flag: Follow up
Flag Status: Flagged

Caution: This message originated from outside of the organisation. Do not click links or open attachments unless you recognise the sender and know the content is safe. If you believe it is suspicious please forward to Suspicious.Emails@pspsl.co.uk and delete the email.

Good morning both,

Please find attached a Network Development Report prepared by National Grid's East Midland's Team in May 2024. This report assessed all existing and future network constraints over a 0-10 year identified on the 33kV network fed from Spalding to South Holland BPS. As considered in Section 2, it was identified that several parts of the electricity network in the region are expected to face problems in the future. In 2028, transformers at Holbeach and Long Sutton substations could become overloaded if nearby equipment fails or is taken offline for maintenance, and low voltage issues may affect areas fed by South Holland. By 2034, further overloads are predicted on circuits and transformers at Holbeach, Long Sutton, and Spalding Park Road, especially during outages, which could strain the system and impact power reliability.

As part of this assessment, NGED explored several solutions for the problems identified, including:

1. Uprating the transformers and circuits to Holbeach primary
2. Installing a third transformer and circuit to Holbeach primary
3. Building a new primary between Holbeach and Long Sutton
4. Reviewing seasonal ratings
5. Procuring flexibility under Holbeach primary

When assessed against the various constraints, option 3 – to build a new primary substation – was determined to be the only feasible solution for reinforcing the existing network and de-loading the existing substation at Holbeach.

The proposed development represents a proactive approach being taken by NGED to ensure the long-term resilience and flexibility of the electricity distribution network in the area, whilst maintain compliance with the Energy Networks Association's network regulations and regulatory compliance in accordance with their statutory duty.

Hopefully this is sufficient information to demonstrate that the need for the substation outweighs the visual impacts of not being able to provide the hedgerow at this time.

Kind regards,

Lucy

Lucy Davies

M 07917969659
T 01684353443

Chat with me on Teams
dalcourmaclaren.com

NOTICE: This email is intended for the named recipient only. It may contain privileged and confidential information. If you are not the intended recipient, notify the sender immediately and destroy this email.
You must not copy, distribute or take action in reliance upon it. Whilst all efforts are made to safeguard emails, Dalcour Maclaren cannot guarantee that attachments are virus free or compatible with your systems and does not accept liability in respect of viruses or computer problems experienced. Dalcour Maclaren reserves the right to monitor all email communications through its internal and external networks.
Dalcour Maclaren Ltd. Registered in England No 04836300
Registered office: The Barn, Bignell Park Barns, Chesterton, Bicester, Oxfordshire, OX26 1TD

Before printing, think about the environment.

From: Pinna-Morrell, Gillian <Gillian.Pinna-Morell@sholland.gov.uk>
Sent: 08 October 2025 14:29
To: Lucy Davies <Lucy.Davies@dalcourmaclaren.com>
Subject: RE: Application reference H05-0439-25: Land west of Branches Lane, Holbeach.

Hi Lucy,

Thank you for the confirmation. If you could please send any correspondence to planningadvice@sholland.gov.uk and also copy in nick.atkinson@sholland.gov.uk.

Kind regards,

Gillian.

From: Lucy Davies <Lucy.Davies@dalcourmaclaren.com>
Sent: 08 October 2025 14:20
To: Pinna-Morrell, Gillian <Gillian.Pinna-Morell@sholland.gov.uk>
Cc: Elsa McLellan <elsa.mclellan@dalcourmaclaren.com>
Subject: RE: Application reference H05-0439-25: Land west of Branches Lane, Holbeach.

Caution: This message originated from outside of the organisation. Do not click links or open attachments unless you recognise the sender and know the content is safe. If you believe it is suspicious please forward to Suspicious.Emails@pspsl.co.uk and delete the email.

Hi Gilian,

Thank you for your phone call this morning.

I can confirm that following a discussion with the NGED project manager for the substation, they are happy to keep the current planning application pending. Please can you provide contact details for your manager and replacement as soon as possible?

Something I forgot to mention during the call in relation to the hedgerow, whilst NGED is looking to obtain additional land for this, the land purchase with the Potato Farm is conditional upon planning permission granted. Therefore, at no time during the application process will the site be within NGED's ownership and the blue line boundary. Based on this, I don't think we can rely on the Grampian condition for the hedgerow.

Any questions or queries, please let me know.

Kind regards,

Lucy

Lucy Davies

M 07917969659
T 01684353443

Chat with me on Teams
dalcourmaclaren.com

DALCOUR MACLAREN

NOTICE: This email is intended for the named recipient only. It may contain privileged and confidential information. If you are not the intended recipient, notify the sender immediately and destroy this email.
You must not copy, distribute or take action in reliance upon it. Whilst all efforts are made to safeguard emails, Dalcour Maclaren cannot guarantee that attachments are virus free or compatible with your systems and does not accept liability in respect of viruses or computer problems experienced. Dalcour Maclaren reserves the right to monitor all email communications through its internal and external networks.
Dalcour Maclaren Ltd. Registered in England No 04836300
Registered office: The Barn, Bignell Park Barns, Chesterton, Bicester, Oxfordshire, OX26 1TD

Before printing, think about the environment.

From: Pinna-Morrell, Gillian <Gillian.Pinna-Morell@sholland.gov.uk>
Sent: 08 October 2025 11:29
To: Lucy Davies <Lucy.Davies@dalcourmaclaren.com>
Cc: Elsa McLellan <elsa.mclellan@dalcourmaclaren.com>
Subject: RE: Application reference H05-0439-25: Land west of Branches Lane, Holbeach.

Good morning Lucy,

Thank you for the confirmation.

Kind regards,

Gillian.

From: Lucy Davies <Lucy.Davies@dalcourmaclaren.com>
Sent: 08 October 2025 11:15
To: Pinna-Morrell, Gillian <Gillian.Pinna-Morell@sholland.gov.uk>
Cc: Elsa McLellan <elsa.mclellan@dalcourmaclaren.com>
Subject: RE: Application reference H05-0439-25: Land west of Branches Lane, Holbeach.

Caution: This message originated from outside of the organisation. Do not click links or open attachments unless you recognise the sender and know the content is safe. If you believe it is suspicious please forward to Suspicious.Emails@pspsl.co.uk and delete the email.

Good morning Gillian,

I hope you are well.

I am writing to inform you that, due to constraints arising from the current red line boundary and substation layout, it is not feasible to provide the hedgerow along the northern boundary. We appreciate that this is a material consideration for the application and acknowledge that its absence would result in a refusal.

In light of this, we have decided to formally withdraw the planning application. A revised submission will follow in the coming months, incorporating a new red line boundary that extends 6 metres to the north. This adjustment will provide adequate space for the hedgerow planting, as well as a suitable stand-off for asset protection and root management.

Our client's surveyor is currently finalising Heads of Terms with the landowner to secure the necessary land.

Separately, the fire safety matter is still under review. NGED has appointed an independent planning consultant to prepare a Fire Risk Assessment, which will accompany the new application. We anticipate that this assessment will support the case for not requiring a fire hydrant at this location.

We thank you for your patience and for getting us to this point, and we will be in touch when the application is ready to be submitted.

I am therefore requesting formally that you withdraw our application ref, H05-0439-25. I would be grateful if you could please confirm this request has been received.

Any questions or queries, please let me know.

Kind regards,

Lucy

Lucy Davies

M 07917969659
T 01684353443

Chat with me on Teams
dalcourmaclaren.com

DALCOUR MACLAREN

NOTICE: This email is intended for the named recipient only. It may contain privileged and confidential information. If you are not the intended recipient, notify the sender immediately and destroy this email.
You must not copy, distribute or take action in reliance upon it. Whilst all efforts are made to safeguard emails, Dalcour Maclaren cannot guarantee that attachments are virus free or compatible with your systems and does not accept liability in respect of viruses or computer problems experienced. Dalcour Maclaren reserves the right to monitor all email communications through its internal and external networks.
Dalcour Maclaren Ltd. Registered in England No 04836300
Registered office: The Barn, Bignell Park Barns, Chesterton, Bicester, Oxfordshire, OX26 1TD

Before printing, think about the environment.

From: Pinna-Morrell, Gillian <Gillian.Pinna-Morell@sholland.gov.uk>
Sent: 03 October 2025 10:26
To: Lucy Davies <Lucy.Davies@dalcourmaclaren.com>
Cc: Elsa McLellan <elsa.mclellan@dalcourmaclaren.com>
Subject: RE: Application reference H05-0439-25: Land west of Branches Lane, Holbeach.

Hi Lucy,

I did respond to Councillor Barnes but have not received a reply.

Regards,

Gillian.

From: Lucy Davies <Lucy.Davies@dalcourmaclaren.com>
Sent: 03 October 2025 09:58
To: Pinna-Morrell, Gillian <Gillian.Pinna-Morell@sholland.gov.uk>
Cc: Elsa McLellan <elsa.mclellan@dalcourmaclaren.com>
Subject: RE: Application reference H05-0439-25: Land west of Branches Lane, Holbeach.

Caution: This message originated from outside of the organisation. Do not click links or open attachments unless you recognise the sender and know the content is safe. If you believe it is suspicious please forward to Suspicious.Emails@pspsl.co.uk and delete the email.

Hi Gillian,

I hope you are well.

I was just wondering if you had received anything further from Councillor Barnes in response to the additional information provided?

Kind regards,

Lucy

Lucy Davies

M 07917969659
T 01684353443

Chat with me on Teams
dalcourmaclaren.com

DALCOUR MACLAREN

NOTICE: This email is intended for the named recipient only. It may contain privileged and confidential information. If you are not the intended recipient, notify the sender immediately and destroy this email.
You must not copy, distribute or take action in reliance upon it. Whilst all efforts are made to safeguard emails, Dalcour Maclaren cannot guarantee that attachments are virus free or compatible with your systems and does not accept liability in respect of viruses or computer problems experienced. Dalcour Maclaren reserves the right to monitor all email communications through its internal and external networks.

Dalcour Maclaren Ltd. Registered in England No 04836300
Registered office: The Barn, Bignell Park Barns, Chesterton, Bicester, Oxfordshire, OX26 1TD

Before printing, think about the environment.

From: Pinna-Morrell, Gillian <Gillian.Pinna-Morell@sholland.gov.uk>
Sent: 30 September 2025 12:00
To: Lucy Davies <Lucy.Davies@dalcourmaclaren.com>
Cc: Elsa McLellan <elsa.mclellan@dalcourmaclaren.com>
Subject: RE: Application reference H05-0439-25: Land west of Branches Lane, Holbeach.

Good morning Lucy,

Thank you for agreeing to the extension of time and for the update. Thank you also for the information relating to the concerns raised by Councillor Barnes, I will respond to him accordingly.

Regards,

Gillian.

From: Lucy Davies <Lucy.Davies@dalcourmaclaren.com>
Sent: 30 September 2025 11:56
To: Pinna-Morrell, Gillian <Gillian.Pinna-Morell@sholland.gov.uk>
Cc: Elsa McLellan <elsa.mclellan@dalcourmaclaren.com>
Subject: RE: Application reference H05-0439-25: Land west of Branches Lane, Holbeach.

Mimecast Attachment Protection has deemed this file to be safe, but always exercise caution when opening files.

Caution: This message originated from outside of the organisation. Do not click links or open attachments unless you recognise the sender and know the content is safe. If you believe it is suspicious please forward to Suspicious.Emails@pspsl.co.uk and delete the email.

Good morning Gillian,

Thank you for your email and apologies for the delayed response, I have just returned from annual leave.

Thank you for sharing with us a copy of Sam's most recent response. We are glad to see that she is satisfied with the additional information provided and has removed her holding objection. We are currently reviewing the recommended conditions with NGED and our highways consultant and will let you know if there are any queries.

The matter of the fire hydrant is still ongoing, however, NGED is currently commissioning a Fire Risk Assessment with a separate consultant which should hopefully help to demonstrate that the risk is low/can be sufficiently mitigated, removing the need for a fire hydrant.

In terms of the additional hedgerow planting, this is being progressed by our landscape consultant and we hope to provide an update in due course. Given these outstanding matters, we are happy to agree to the extension of time of the 31st October.

Finally, I have just seen the most recent response from Councillor Barnes. Could I please check whether he has had sight of any of the new highways information, or is aware of our discussions regarding the hedgerow? We would like to reassure him that his comments have been taken into consideration and we are addressing these matters accordingly.

I also advised in my email from the 2nd July that no pylons are being proposed as part of the proposed development. The connecting cable route being installed under NGED's permitted development rights will be located entirely below ground and has been subject to the appropriate environmental and archaeological checks.

With regards to Councillor Barnes' concerns regarding the location of the substation, as mentioned, the primary substation site is an essential point between multiple existing substations in the locality and has connections to an existing 11kV overhead line, and benefits therefore from its location but also highways links. This development would not have been appropriate in Holbeach.

Are you able to pass this feedback onto him accordingly? We would be happy to have a call to discuss this in more detail if it would be helpful.

Kind regards,

Lucy

Lucy Davies

M 07917969659
T 01684353443

Chat with me on Teams
dalcourmaclaren.com

DALCOUR MACLAREN

NOTICE: This email is intended for the named recipient only. It may contain privileged and confidential information. If you are not the intended recipient, notify the sender immediately and destroy this email.
You must not copy, distribute or take action in reliance upon it. Whilst all efforts are made to safeguard emails, Dalcour Maclaren cannot guarantee that attachments are virus free or compatible with your systems and does not accept liability in respect of viruses or computer problems experienced. Dalcour Maclaren reserves the right to monitor all email communications through its internal and external networks.
Dalcour Maclaren Ltd. Registered in England No 04836300
Registered office: The Barn, Bignell Park Barns, Chesterton, Bicester, Oxfordshire, OX26 1TD

Before printing, think about the environment.

From: Pinna-Morrell, Gillian <Gillian.Pinna-Morell@sholland.gov.uk>
Sent: 26 September 2025 10:09
To: Lucy Davies <Lucy.Davies@dalcourmaclaren.com>
Subject: Application reference H05-0439-25: Land west of Branches Lane, Holbeach.

Good morning Lucy,

I trust you are well; I have received the consultation response from Sam Legg (copy attached) who is now satisfied with the proposal on highway grounds subject to recommended conditions. Could you please provide me with an update on the outstanding matters of the fire hydrant location and revised site layout to facilitate the provision of a hedge. Could we also please agree a further extension of time, I would suggest 31st October 2025.

Kind regards,

Gillian.

Gillian Pinna-Morrell BA(Hons) MRTPI
Major Applications Officer
South Holland District Council

Gillian.Pinna-Morrell@sholland.gov.uk
www.sholland.gov.uk

South Holland District Council now has an official WhatsApp Channel – delivering timely updates and essential information straight to residents. Stay informed about local news, events, and services with the most current updates at your fingertips. Join us here today!

****
****

The information contained in this email is confidential and intended only for the person or organisation to which it is addressed. If you have received it by mistake, please disregard and notify the sender immediately. Unauthorised disclosure or use of such information may be a breach of legislation or confidentiality and the content may be legally privileged. Any improper dissemination, forwarding, printing, or copying of this email is strictly prohibited. Emails sent from and received by employees of South Holland District Council may be monitored. They may also be disclosed to other people under legislation, particularly the Freedom of Information Act 2000, GDPR, the Data Protection Act 2018 and the Environmental Information Regulations 2004. If you have contacted the Council for a service any personal data you share will be used to help you access its services, or to answer your enquiry in line with our Privacy Policy. For full details of your rights please visit our website at www.sholland.gov.uk. Unless this email relates to South Holland District Council business it will be regarded by the Council as personal and will not be authorised by or sent on behalf of the Council.

****
****

South Holland District Council now has an official WhatsApp Channel – delivering timely updates and essential information straight to residents. Stay informed about local news, events, and services with the most current updates at your fingertips. Join us here today!

****
****

The information contained in this email is confidential and intended only for the person or organisation to which it is addressed. If you have received it by mistake, please disregard and notify the sender immediately. Unauthorised disclosure or use of such information may be a breach of legislation or confidentiality and the content may be legally privileged. Any improper dissemination, forwarding, printing, or copying of this email is strictly prohibited. Emails sent from and received by employees of South Holland District Council may be monitored. They may also be disclosed to other people under legislation, particularly the Freedom of Information Act 2000, GDPR, the Data Protection Act 2018 and the Environmental Information Regulations 2004. If you have contacted the Council for a service any personal data you share will be used to help you access its services, or to answer your enquiry in line with our Privacy Policy. For full details of your rights please visit our website at www.sholland.gov.uk. Unless this email relates to South Holland District Council business it will be regarded by the Council as personal and will not be authorised by or sent on behalf of the Council.

****
****

South Holland District Council now has an official WhatsApp Channel – delivering timely updates and essential information straight to residents. Stay informed about local news, events, and services with the most current updates at your fingertips. Join us here today!

****
****

The information contained in this email is confidential and intended only for the person or organisation to which it is addressed. If you have received it by mistake, please disregard and notify the sender immediately. Unauthorised disclosure or use of such information may be a breach of legislation or confidentiality and the content may be legally privileged. Any improper dissemination, forwarding, printing, or copying of this email is strictly prohibited. Emails sent from and received by employees of South Holland District Council may be monitored. They may also be disclosed to other people

under legislation, particularly the Freedom of Information Act 2000, GDPR, the Data Protection Act 2018 and the Environmental Information Regulations 2004. If you have contacted the Council for a service any personal data you share will be used to help you access its services, or to answer your enquiry in line with our Privacy Policy. For full details of your rights please visit our website at www.sholland.gov.uk. Unless this email relates to South Holland District Council business it will be regarded by the Council as personal and will not be authorised by or sent on behalf of the Council.

****
****

South Holland District Council now has an official WhatsApp Channel – delivering timely updates and essential information straight to residents. Stay informed about local news, events, and services with the most current updates at your fingertips. Join us here today!

****
****

The information contained in this email is confidential and intended only for the person or organisation to which it is addressed. If you have received it by mistake, please disregard and notify the sender immediately. Unauthorised disclosure or use of such information may be a breach of legislation or confidentiality and the content may be legally privileged. Any improper dissemination, forwarding, printing, or copying of this email is strictly prohibited. Emails sent from and received by employees of South Holland District Council may be monitored. They may also be disclosed to other people under legislation, particularly the Freedom of Information Act 2000, GDPR, the Data Protection Act 2018 and the Environmental Information Regulations 2004. If you have contacted the Council for a service any personal data you share will be used to help you access its services, or to answer your enquiry in line with our Privacy Policy. For full details of your rights please visit our website at www.sholland.gov.uk. Unless this email relates to South Holland District Council business it will be regarded by the Council as personal and will not be authorised by or sent on behalf of the Council.

****
****

South Holland District Council now has an official WhatsApp Channel – delivering timely updates and essential information straight to residents. Stay informed about local news, events, and services with the most current updates at your fingertips. Join us here today!

****
****

The information contained in this email is confidential and intended only for the person or organisation to which it is addressed. If you have received it by mistake, please disregard and notify the sender immediately. Unauthorised disclosure or use of such information may be a breach of legislation or confidentiality and the content may be legally privileged. Any improper dissemination, forwarding, printing, or copying of this email is strictly prohibited. Emails sent from and received by employees of South Holland District Council may be monitored. They may also be disclosed to other people under legislation, particularly the Freedom of Information Act 2000, GDPR, the Data Protection Act 2018 and the Environmental Information Regulations 2004. If you have contacted the Council for a service any personal data you share will be used to help you access its services, or to answer your enquiry in line with our Privacy Policy. For full details of your rights please visit our website at www.sholland.gov.uk. Unless this email relates to South Holland District Council business it will be regarded by the Council as personal and will not be authorised by or sent on behalf of the Council.

****
****

Spalding and South Holland BSPs

Network Development Report – East Midlands

May 2024

Electricity Distribution

nationalgrid

Contents

Spalding and South Holland 33 kV 2

1. Network Overview 2
1.1 Network Topology 2
1.2 Network Operability Modelling 3

2. Network Constraints and Solution Options 4
2.1 Summary of Network Constraints 4
2.2 Holbeach Transformer and Circuit Overloads 5
2.3 Long Sutton Transformer and Circuit Overloads 8
2.4 Holbeach and Long Sutton Low Voltage 11
2.5 Spalding Park Road Transformer Overloads 14

Spalding and South Holland 33 kV

1. Network Overview

Spalding and South Holland Bulk Supply Points (BSPs) are fed from Walpole Grid Supply Point (GSP) in National Grid Electricity Distribution's (NGED's) East Midlands licence area. Both BSPs are fed by the same dual 132 kV circuit directly from Walpole GSP.

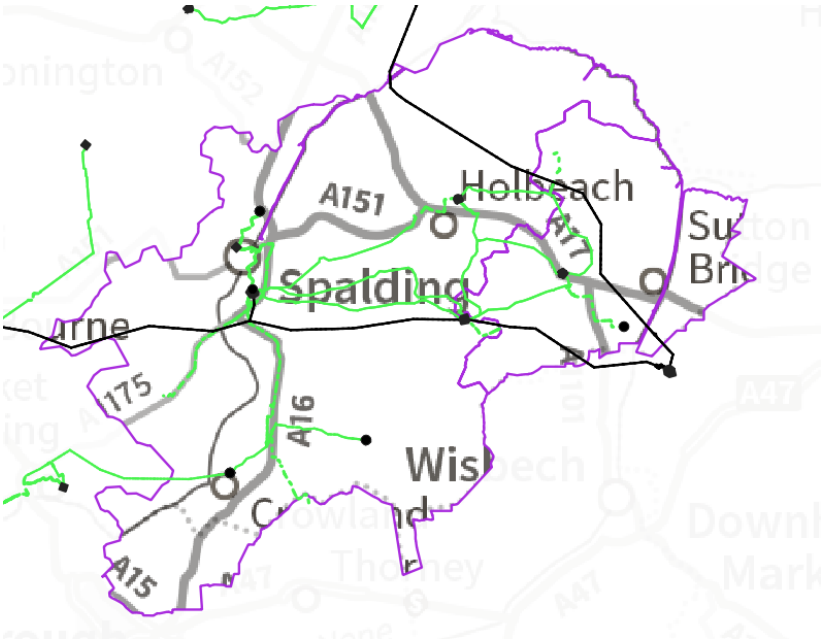

Figure 1.1 Spalding and South Holland geographic network coverage

This report discusses all existing and future network constraints over a 0-10 year horizon identified on the 33 kV network fed from Spalding and South Holland BSPs (as well as some 11 kV network relevant to the development of the 33 kV network). This uses the methodology outlined in the Network Development Plan Methodology Report with Network Operability Modelling applied as outlined below.

For the purposes of this analysis the NGED Best View Distribution Future Energy Scenario (DFES) has been used to study the years 2022 (baseline), 2028 and 2034, with consideration given to how proposals could change under the other scenarios. Five representative days have been studied across the four seasons: Winter Peak Demand, Intermediate Warm Peak Demand, Intermediate Cool Peak Demand, Summer Peak Demand and Summer Peak Generation.

1.1 Network Topology

Spalding BSP has two 33 kV busbars fed by two 132/33 kV GTs both rated to 45/90/117 MVA. Spalding BSP feeds six primary substations: Crowland T1, Holbeach T2, Spalding, Spalding Park Road, Wardentree Park and Whaplode Drove. Spalding primary is located at the same site as Spalding BSP. All of the primaries fed from Spalding BSP have two 33/11 kV transformers, with the exception of Whaplode Drove which is a single transformer primary.

Spalding BSP is interconnected with Bourne and Stamford BSPs via Crowland primary, and with South Holland BSP via Holbeach primary. There are also two 33 kV circuits between Spalding and South Holland BSP which are run closed under normal running arrangements, paralleling the two BSPs.

South Holland BSP has two 33 kV busbars fed by a single 132/33 kV GT rated to 45/90/117 MVA. South Holland BSP feeds two primary substations: Holbeach T2 and Long Sutton. Both have two 33/11 kV transformers.

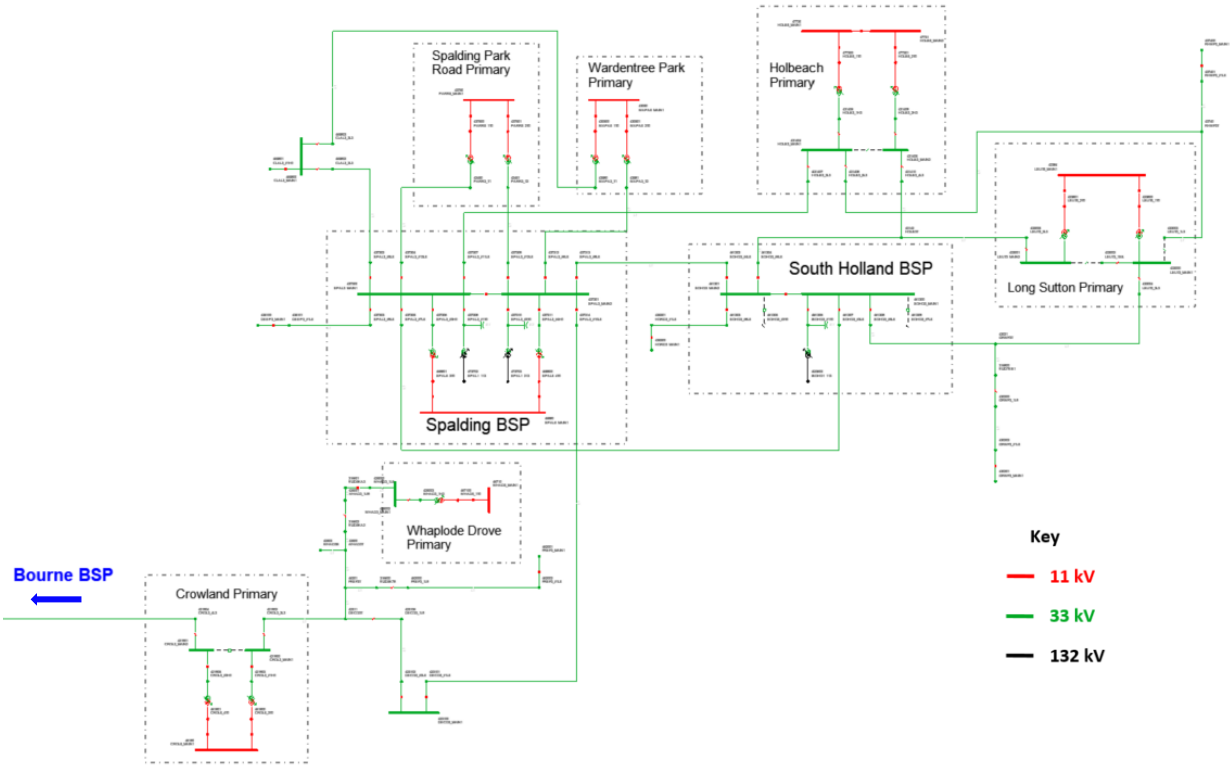

Figure 1.1.1 Spalding and South Holland 33 kV network single line diagram

1.2 Network Operability Modelling

The following network automation and manual switching schemes have been modelled in the analysis of this area, aligning to how the network is currently operated, as well as proposed actions to manage some constraints identified operationally or to account for proposed network changes.

- For the loss of an infeed to a transformer at any of the primaries fed from Spalding or South Holland BSPs under arranged outages, the lower voltage side circuit breaker is opened to prevent back-energisation.
- The 33 kV network downstream of Spalding BSP is split for an arranged outage on the 33 kV bus section breaker to prevent loose couples. This involves splitting Spalding, Spalding Park Road and Wardentree Park (all of which are fed from both bars) at 11 kV.
- For an arranged outage on the 33 kV bus section breaker at South Holland BSP, Long Sutton primary is split at 11 kV and the 33 kV interconnector between Spalding and South Holland main 1 is opened.
- For an arranged outage on South Holland main 2 the 33 kV interconnector between Spalding and South Holland main 1 is opened, and Holbeach primary is split at 11 kV.
- For an arranged outage on the infeed to Spalding, or on the 33 kV bus section breaker, the loose couples with Bourne and South Holland BSPs are opened. For the loose couple with Bourne this involves splitting Crowland primary at 11 kV, and for South Holland this involves opening both 33 kV interconnection circuits and splitting Holbeach primary at 11 kV.
- Whaplode Drove primary is transferred into Bourne BSP for an outage on the 33 kV infeed from Spalding BSP if possible. This is achieved by paralleling Crowland primary at 33 kV.
- For an outage on the 33/11 kV transformer at Whaplode Drove primary, or on the incoming 33 kV circuit (the section directly feeding the primary which prevents maintaining supply at 33 kV) the load is backfed on the 11 kV network to Spalding and Long Sutton primaries.
- In future year studies Spalding BSP is split for an arranged outage on GT1 or the 33 kV main 1 busbar at South Holland BSP.

- The potential new primary substations fed from South Holland BSP would be split for bus section breaker outages and their LV circuit breakers opened for outages on either infeed (as with Long Sutton primary).
- If the new primary near Sutton Bridge is modelled as a single transformer primary it is backfed at 11 kV for an outage in its infeed to Long Sutton primary, which is then split at 11 kV.

2. Network Constraints and Solution Options

2.1 Summary of Network Constraints

The following constraints were identified for the Best View Scenario, for which mitigation options will be discussed:

- Overloads are seen on the transformers at Holbeach primary in 2028 for arranged and fault outages on the other transformer, circuit or 33 kV busbar. Overloads are also seen on the 33 kV infeed circuit to T1 and on the 33 kV circuit to the Holbeach Tee in 2034.
- Overloads are seen on the transformers at Long Sutton primary in 2028 for arranged and fault outages on the other transformer, circuit or 33 kV busbar. Overloads are also seen on the 33 kV infeed circuit to T2 in 2034.
- Low volts are observed on the 33 kV and 11 kV network fed from South Holland BSP for various outages in 2028.
- Overloads are seen on the transformers at Spalding Park Road in 2034 for an arranged or fault outage on the other transformer/infeed from Spalding BSP.

2.2 Holbeach Transformer and Circuit Overloads

Constraint Overview

Generation | Demand

The table below outlines the nature of the network constraints identified in the network analysis.

Table 2.2.1 constraint(s) and conditions under which constraint(s) occur

Constraint	N-1 Condition	Subsequent N-2 Condition	First studied year constraint is observed in each season under Best View			
			Winter	Int Cool	Int Warm	Summer
Holbeach T1 or T2 overload	Arranged or fault outage on either infeed to Holbeach	None	2034	2028	2034	2034
33 kV circuit to Holbeach T1 overload	Arranged or fault outage on the infeed to Holbeach T2	None	2034	2034	2034	2034
South Holland to the Holbeach Tee 33 kV circuit overload	Arranged outage on the infeed to Holbeach T1	Fault on the infeed to Long Sutton T1	2034	2034	2034	2034

Uncertainty under other Distribution Future Energy Scenarios: This constraint occurs for other seasons in 2028 for the higher growth scenarios (Leading the Way and Consumer Transformation). The only scenario for which intervention is not required by 2034 is Falling Short.

Solution Options

A list of each of the options considered for this constraint is given below.

Table 2.2.2 solution options to solve constraint(s)

Option	Description
Reinforcement	
1	Uprate the transformers and circuits to Holbeach primary.
2	Install a third transformer and circuit to Holbeach primary.
3	Build a new primary between Holbeach and Long Sutton.
Operational Mitigation	
4	Review seasonal ratings.
Flexibility Services	
5	Procure flexibility under Holbeach primary.

Solution Development

These options have been assessed on their technical viability and their likely cost-effectiveness pending a full Cost Benefit Analysis (CBA). This CBA has been carried out for this constraint as part of the RIIO-ED2 Business Plan.

Option 1 – Uprate the transformers and circuits to Holbeach primary

Discounted

Capacity released for constraint(s) considered: Minimal

New limiting factor for constraint(s) considered: Low volts on the 33 kV network around and the 11 kV network fed from Holbeach and Long Sutton primaries

Detailed description: Uprating the transformers at Holbeach primary to 20/40 MVA units and the limiting sections on the Spalding – Holbeach T1 (which is currently the lower rated circuit) would significantly increase the thermal capacity of the substation. However, without carrying out extensive circuit works the impact on the voltage would be limited.

This option would therefore not be particularly beneficial in alleviating the constraint described in Section 2.4 of this report and has been discounted. This option also does not confer any benefits for Long Sutton primary which is also constrained both thermally and on its voltage as described in Section 2.3 and Section 2.4 of this report.

Option 2 – Install a third transformer and circuit to Holbeach primary

Discounted

Capacity released for constraint(s) considered: Up to 24 MVA

New limiting factor for constraint(s) considered: Firm capacity at Long Sutton primary

Detailed description: Installing a third transformer at Holbeach primary would resolve the thermal constraints on the existing transformers and circuits. This would require a third circuit to be built to Holbeach primary. This option has been discounted for a number of reasons; it confers no benefits for Long Sutton primary, it introduces additional operational complexity by creating a three transformer primary and space out of the primary for new 11 kV feeders is limited.

Option 3 – Build a new primary between Holbeach and Long Sutton

Viable

Capacity released for constraint(s) considered: Dependent on 11 kV transfers

New limiting factor for constraint(s) considered: Capacity at South Holland BSP

Detailed description: Building a new primary substation between Holbeach and Long Sutton primaries would allow demand from Holbeach to be picked up. A possible location for this new primary has been identified to the south of Holbeach. As this site is located significantly closer to Holbeach than to Long Sutton more load will be easily transferrable from Holbeach primary than from Long Sutton primary (both on the existing 11 kV network and on new 11 kV network planned to be built). Holbeach primary can be deloaded sufficiently to resolve the thermal constraints on its transformers and incoming circuits.

The site identified as a potential location for the new primary substation is located near to the Holbeach Tee. There is therefore an opportunity to unstitch the feeders to Holbeach and Long Sutton primaries. This could be accomplished in two ways:

- Installing a higher rated cable for one or both of the circuits to the new primary and having it then continue on to the Holbeach Tee. The existing circuit would then be utilised as a dedicated feeder to Long Sutton, with the new higher rated circuit then feeding Holbeach T2 and one of the transformers at the new primary. Two 400 mm^2 XLPE cables were modelled for load flow studies assessing the impact of the new primary. By increasing the rating of both circuits, the option to feed a third transformer at Holbeach primary is also left as a possibility to accommodate long term load growth if required.
- Installing a third cable to the new primary which would then continue on to the Holbeach Tee as in the option described above. This option would create a network with two clean infeeds to each of the three primaries, which is a simpler and more operable network topology. However, this option would be significantly more expensive due to both the cost of the extra cable and the additional works which would be triggered at South Holland BSP to accommodate an additional feeder.

Option 4 – Review seasonal ratings

Viable

Capacity released for constraint(s) considered: Dependent on review

New limiting factor for constraint(s) considered: As before

Detailed description: Overloads are only seen in 2028 for intermediate cool. It is therefore possible that this constraint could be delayed slightly by reviewing NGED's internal policy regarding transformer ratings, which does not currently distinguish between summer and intermediate cool ratings (which may be overly pessimistic). This solution is dependent on an internal review and would not be a long term solution, especially considering the fact that it would be of no benefit to the voltage constraint discussed in Section 2.4 of this report.

Option 5 – Procure flexibility under Holbeach primary

Discounted

Flexibility service type: Generation turn up/demand turn down.

Detailed description: Flexibility services could be procured to help manage the thermal constraints on the transformers and circuits to Holbeach primary. However, as described in Section 2.4 of this report a severe voltage constraint has been identified which flexibility is not suitable to mitigate against. Reinforcement can therefore not be deferred using flexibility in this case.

Solution Recommendation

The only operational mitigation identified is a possible review of NGED's seasonal ratings which at best is only a short term solution. When considered in conjunction with the constraints discussed in Section 2.3 and Section 2.4 of this report building a new primary to deload Holbeach is likely the optimal reinforcement strategy. Options for taking the opportunity to further futureproof the network economically by uprating one of the cables or installing a third cable to the primary have been discussed. Which of these options are taken forward will be subject to a CBA as a third cable confers additional network benefits but is the more expensive of the two choices.

2.3 Long Sutton Transformer and Circuit Overloads

Constraint Overview

Generation | **Demand**

The table below outlines the nature of the network constraints identified in the network analysis.

Table 2.3.1 constraint(s) and conditions under which constraint(s) occur

Constraint	N-1 Condition	Subsequent N-2 Condition	First studied year constraint is observed in each season under Best View			
			Winter	Int Cool	Int Warm	Summer
Long Sutton T1 or T2 overload	Arranged or fault outage on either infeed to Long Sutton	None	2034	2028	2034	2034
Holbeach Tee to Long Sutton T2 33 kV circuit overload	Arranged or fault outage on the infeed to Long Sutton T1	None	2034	2034	2034	-

Uncertainty under other Distribution Future Energy Scenarios: This constraint occurs for other seasons in 2028 under the Leading the Way scenario. The only scenario for which intervention is not required by 2034 is Falling Short.

Solution Options

A list of each of the options considered for this constraint is given below.

Table 2.3.2 solution options to solve constraint(s)

Option	Description
Reinforcement	
1	Uprate the transformers and circuits to Long Sutton primary.
2	Install a third transformer and circuit to Long Sutton primary.
3	Build a new primary between Holbeach and Long Sutton.
4	Build a new primary near Sutton Bridge.
Operational Mitigation	
5	Review seasonal ratings.
Flexibility Services	
6	Procure flexibility under Long Sutton primary.

Solution Development

These options have been assessed on their technical viability and their likely cost-effectiveness pending a full CBA. This CBA has been carried out for this constraint as part of the RIIO-ED2 Business Plan.

Option 1 – Uprate the transformers and circuits to Long Sutton primary

Discounted

Capacity released for constraint(s) considered:

New limiting factor for constraint(s) considered: Low volts on the 33 kV network around and the 11 kV network fed from Holbeach and Long Sutton primaries

Detailed description: Uprating the transformers at Long Sutton primary to 20/40 MVA units and the limiting sections on the 33 kV circuits from South Holland BSP would significantly increase the thermal capacity of the substation. However, without carrying out extensive circuit works the impact on the voltage would be limited.

This option would therefore not be particularly beneficial in alleviating the constraint described in Section 2.4 of this report and has been discounted. This option also does not confer any benefits for Holbeach primary which is also constrained both thermally and on its voltage as described in Section 2.2 and Section 2.4 of this report.

Option 2 – Install a third transformer and circuit to Long Sutton primary

Discounted

Capacity released for constraint(s) considered: Minimal

New limiting factor for constraint(s) considered: Low volts on the Long Sutton 11 kV network

Detailed description: Installing a third transformer and circuit to Long Sutton primary would increase the thermal capacity of the substation and improve the voltage. As with option 1 this does not confer any network benefits for Holbeach primary which is also thermally constrained as discussed in Section 2.2 of this report. This option also creates additional operational complexity by creating a three transformer primary. Most critically, there are only two 33 kV busbars at South Holland BSP so a third transformer would need to be fed from the same busbar as one of the existing transformers so for a busbar fault two transformers would be lost.

The capacity of the site would therefore not be significantly increased by adding a third transformer. There are no BSPs in close enough proximity to practically or economically supply the third transformer other than South Holland. This option has therefore been discounted.

Option 3 – Build a new primary between Holbeach and Long Sutton

Viable

Capacity released for constraint(s) considered: Dependent on 11 kV transfers

New limiting factor for constraint(s) considered: Capacity at South Holland BSP

Detailed description: As discussed in Section 2.2 of this report a site has been identified as a viable location for a new primary substation between Holbeach and Long Sutton primaries. This new primary could be used to deload Long Sutton primary and help reduce the thermal and voltage constraints seen at the substation. However, the location identified is significantly closer to Holbeach primary and therefore less load will be able to be transferred to this new primary from Long Sutton. Initial 11 kV studies indicate only around 10% of the demand at Long Sutton could feasibly be moved to the new primary, even with some 11 kV works being carried out.

Transferring any more load from Long Sutton would require extensive 11 kV works to cover the required distances without creating voltage constraints. No other viable locations have been identified which are closer to the midpoint between the two primaries that could provide additional benefit for Long Sutton. This solution, while benefitting Long Sutton primary, is not sufficient alone to fully manage the constraints seen there.

Option 4 – Build a new primary near Sutton Bridge

Viable

Capacity released for constraint(s) considered: Dependent on 11 kV transfers

New limiting factor for constraint(s) considered: Capacity at Holbeach primary

Detailed description: A significant and growing demand centre has been identified at Sutton Bridge around 5 km to the east of Long Sutton primary. This area is currently supplied from Long Sutton primary and there are very limited alternative options for supplying the area as it is located at the edge of NGED's licence area with the river Nene just to the east. One option for deloading Long Sutton primary is to build a new primary substation in this area. This substation could be supplied either via Long Sutton (which may necessitate upgrades to the incoming 33 kV circuits) or teed off from the nearby circuit to a 33 kV generator. It could initially be built as a single transformer primary with scope to add a second transformer as load in the area grows.

This new primary would not provide any benefit for Holbeach primary but would alleviate the thermal and voltage constraints seen at Long Sutton primary. Additionally, it would benefit the 11 kV feeders to Sutton Bridge from Long Sutton which are seeing a voltage constraint due to the long feeder distances.

Option 5 – Review seasonal ratings

Viable

Capacity released for constraint(s) considered: Dependent on review

New limiting factor for constraint(s) considered: As before

Detailed description: Overloads are only seen in 2028 for intermediate cool. It is therefore possible that this constraint could be delayed slightly by reviewing NGED's internal policy regarding transformer ratings, which does not currently distinguish between summer and intermediate cool ratings (which may be overly pessimistic). This solution is dependent on an internal review and would not be a long term solution, especially considering the fact that it would be of no benefit to the voltage constraint discussed in Section 2.4 of this report.

Option 6 – Procure flexibility under Long Sutton primary

Discounted

Flexibility service type: Generation turn up/demand turn down.

Detailed description: Flexibility services could be procured to help manage the thermal constraints on the transformers and circuits to Long Sutton primary. However, as described in Section 2.4 of this report a severe voltage constraint has been identified which flexibility is not suitable to mitigate against. Reinforcement can therefore not be deferred using flexibility in this case.

Solution Recommendation

The only operational mitigation identified is a possible review of NGED's seasonal ratings, which at best is only a short term solution. The two reinforcement solutions discussed to manage this constraint both involve building new primary substations as the reinforcement of Long Sutton primary itself has been deemed untenable. A new primary between Holbeach and Long Sutton should be progressed first, as it will provide benefits to both existing primaries. However, as discussed the demand which can be shifted from Long Sutton is insufficient to manage this constraint in the long term so a new primary at or near Sutton Bridge could be progressed at a later date as the need arises.

2.4 Holbeach and Long Sutton Low Voltage

Constraint Overview

Generation | Demand

The table below outlines the nature of the network constraints identified in the network analysis.

Table 2.4.1 constraint(s) and conditions under which constraint(s) occur

Constraint	N-1 Condition	Subsequent N-2 Condition	First studied year constraint is observed in each season under Best View			
			Winter	Int Cool	Int Warm	Summer
Low volts on the Holbeach and Long Sutton network	Fault or arranged outage on any of the 33 kV circuits to Long Sutton or Holbeach	None	2034	2034	2034	2034
Low volts on the Holbeach and Long Sutton network	South Holland main 1 busbar fault	None	2028	2028	2028	2034

Uncertainty under other Distribution Future Energy Scenarios: As with the thermal constraints at each primary this constraint is exacerbated most significantly under the Leading the Way and Consumer Transformation scenarios. Even under Falling Short which sees the lowest demand growth intervention is triggered by 2034.

Solution Options

A list of each of the options considered for this constraint is given below.

Table 2.4.2 solution options to solve constraint(s)

Option	Description
Reinforcement	
1	Install a second GT at South Holland BSP.
2	Move the other 33 kV interconnector with Spalding BSP to main 2 at South Holland BSP.
3	Build a new primary substation.
4	Build a new BSP fed from the 132 kV circuits to Boston BSP.
Operational Mitigation	
5	Alternative running arrangements.
6	Remove the protection between the 33 kV busbars at South Holland BSP.
Flexibility Services	
7	Procure flexibility under Holbeach and Long Sutton primaries.

Solution Development

These options have been assessed on their technical viability and their likely cost-effectiveness pending a full CBA. This CBA has been carried out for this constraint as part of the RIIO-ED2 Business Plan.

Option 1 – Install a second GT at South Holland BSP

Viable

Capacity released for constraint(s) considered: Up to 4 MVA per primary

New limiting factor for constraint(s) considered: Thermal capacity at Holbeach and Long Sutton primaries

Detailed description: In this option, a second GT would be installed at South Holland BSP. This would help alleviate the voltage constraint, most notably for a main 1 busbar fault as this would no longer remove the only GT at South Holland BSP.

This reinforcement would improve, but not fully resolve the voltage constraints seen for various arranged and fault outages on the three 33 kV circuits to Holbeach and Long Sutton primaries. This option is therefore not the optimal short term solution for this constraint due to the large expenditure required. It is however likely to be necessary in the long term as demand continues to grow in the area to remove dependence on Spalding BSP and the 33 kV interconnection from it during outages.

Option 2 – Move the other 33 kV interconnector with Spalding BSP to main 2 at South Holland BSP

Discounted

Capacity released for constraint(s) considered: Removes the constraint only for low volts caused by a main 1 busbar fault at South Holland BSP

New limiting factor for constraint(s) considered: Low volts for faults on the 33 kV circuits to Holbeach and/or Long Sutton primaries

Detailed description: By moving the interconnector between Spalding BSP's main 1 (33 kV) busbar and South Holland BSP's main 1 (33 kV) busbar to main 2 at South Holland, the voltage constraint seen for faults on main 1 at South Holland would be improved. This is because a single busbar fault would no longer lead to the loss of both the GT at South Holland and one of the 33 kV interconnectors at once (for a main 2 fault the GT would still be supplying South Holland and for a main 1 fault both interconnectors would still be supplying the primaries).

This option has been discounted as it would not resolve the voltage constraints seen for faults on the 33 kV circuits, and as such would not significantly defer intervention. It would also create additional complications, including reducing network operability and having to move the circuit back once a more permanent intervention is implemented.

Option 3 – Build a new primary substation

Viable

Capacity released for constraint(s) considered: Dependent on 11 kV transfers

New limiting factor for constraint(s) considered: Capacity at South Holland BSP

Detailed description: Building a new substation in the area around Holbeach and Long Sutton would help resolve this voltage constraint as demand could be transferred into the new primary, deloading the existing network.

The possible locations for a new primary substation are discussed in more detail in Section 2.2 and Section 2.3 of this report, with a new primary substation to the south of Holbeach primarily benefitting Holbeach primary and a new substation at or near Sutton Bridge primarily benefitting Long Sutton primary.

Option 4 – Build a new BSP fed from the 132 kV circuits to Boston BSP

Discounted

Capacity released for constraint(s) considered: Resolves voltage constraint

New limiting factor for constraint(s) considered: Thermal capacity at Holbeach and Long Sutton primaries

Detailed description: The 132 kV dual circuit from Walpole GSP to Boston BSP passes 2 km north of Holbeach. If a new 132/11 kV BSP could be built fed from this dual circuit it could be used to deload the existing primaries.

This option has been discounted as it would create a breach of Engineering Recommendation P18 due to the number of addresses on each of the circuits.

Option 5 – Alternative running arrangements

Discounted

Capacity released for constraint(s) considered: None

New limiting factor for constraint(s) considered: Improves voltages for some 33 kV circuit faults but exacerbates the issue for other faults

Detailed description: A number of alternative running arrangements have been considered, including closing the normal open point between Long Sutton and Holbeach primaries and paralleling the 33 kV busbars at one or both of the substations.

These running arrangements have been discounted, as although they improve the voltage for certain outage combinations, they exacerbate others. Additionally, paralleling the 33 kV busbars at either primary would leave them at single circuit risk as a fault on any 33 kV infeed circuit, primary transformer or 33 kV busbar would travel through the now paralleled busbars and disconnect the entire site. This significantly reduce security of supply for customers and would leave the network non-compliant with Engineering Recommendation P2. In the case of closing the normal open point between the two primaries a fault could then lose the infeeds to Holbeach T1 and Long Sutton T1 at the same time, exacerbating the thermal and voltage constraints discussed.

Option 6 – Remove the protection between the 33 kV busbars at South Holland BSP

Discounted

Capacity released for constraint(s) considered: Removes the constraint only for low volts caused by a busbar fault at South Holland BSP

New limiting factor for constraint(s) considered: Low volts for faults on the 33 kV circuits to Holbeach and/or Long Sutton primaries

Detailed description: Removing the protection between the main 1 and main 2 33 kV busbars at South Holland BSP would alleviate the voltage constraint seen for faults on the main 1 busbar, as both busbars would instead be lost. This option has been discounted because as with option 2 it does not provide any benefit for 33 kV circuit outages, reduces security of supply for Long Sutton primary and could exacerbate the thermal and voltage constraints at Holbeach primary.

Option 7 – Procure flexibility under Holbeach and Long Sutton primaries

Discounted

Flexibility service type: Generation turn up/demand turn down.

Detailed description: Flexibility services are not suitable to manage this constraint as it is voltage driven. This constraint has been considered as part of the Distribution Network Options Assessment (DNOA) process.

Solution Recommendation

No viable operational mitigations have been identified to alleviate this constraint, and flexibility is not suitable to defer reinforcement in this case. The optimal reinforcement strategy for resolving this voltage constraint and for resolving the thermal constraints discussed in Section 2.2 and Section 2.3 of this report is to build a new primary substation. A viable location for a new primary substation has been identified between Holbeach and Long Sutton, but as this location is significantly closer to Holbeach the benefits for Long Sutton will be limited. A new primary substation near Sutton Bridge may therefore also be required further into the future, as well as the eventual installation of a second GT at South Holland BSP.

2.5 Spalding Park Road Transformer Overloads

Constraint Overview

Generation | **Demand**

The table below outlines the nature of the network constraints identified in the network analysis.

Table 2.5.1 constraint(s) and conditions under which constraint(s) occur

Constraint	N-1 Condition	Subsequent N-2 Condition	First studied year constraint is observed in each season under Best View			
			Winter	Int Cool	Int Warm	Summer
Spalding Park Road T1 or T2 overload	Arranged or fault outage on either infeed to Spalding Park Road	None	-	2034	-	-

Uncertainty under other Distribution Future Energy Scenarios: This constraint is triggered in the same year and is present in the same seasons for the Leading the Way and Consumer Transformation scenarios. Under the System Transformation and Falling Short scenarios intervention is not required by 2034.

Solution Options

A list of each of the options considered for this constraint is given below.

Table 2.5.2 solution options to solve constraint(s)

Option	Description
Reinforcement	
1	Uprate the transformers at Spalding Park Road primary.
2	Install additional transformers at Spalding Park Road primary.
3	Reinforce Spalding primary.
Operational Mitigation	
4	Review seasonal ratings.
Flexibility Services	
5	Procure flexibility under Spalding Park Road primary.

Solution Development

These options have been assessed on their technical viability and their likely cost-effectiveness pending a full CBA. This CBA will be subsequently carried out by the DNO to determine the optimal reinforcement solution, which will then be tested against market provided flexibility by the DSO as part of the DNOA process.

Option 1 – Uprate the transformers at Spalding Park Road primary

Discounted

Capacity released for constraint(s) considered: N/A

New limiting factor for constraint(s) considered: As before

Detailed description: Uprating the two 33/11 kV transformers at Spalding Park Road primary would alleviate this constraint. This option is not viable, as the transformers are already the highest rating NGED uses on the network as standard. Utilising non-standard equipment creates a number of issues, such as finding replacements if serious faults occur.

Option 2 – Install additional transformers at Spalding Park Road primary

Viable

Capacity released for constraint(s) considered: 12 MVA

New limiting factor for constraint(s) considered: 33 kV circuit capacity

Detailed description: Installing a third primary transformer and 33 kV circuit to Spalding Park Road alone would not create significant additional capacity at the substation, as the transformers would still be fed from the only two 33 kV busbars at Spalding BSP (so for the loss of a busbar two primary transformers could be lost).

If two additional primary transformers were installed (one fed from each of the existing circuits) then capacity could be added to the primary as the 33 kV circuits feeding the primary are rated significantly higher than the existing transformers. There would then be the option at some point in the future to build two new 33 kV circuits to the primary to feed these transformers if demand grew to a high enough level to necessitate it (this would however be quite expensive as the new circuits would likely need to be underground cable, and new 33 kV circuit breakers would also be needed at Spalding BSP). This option is subject to sufficient space being available at the primary.

Option 3 – Reinforce Spalding primary

Viable

Capacity released for constraint(s) considered: Up to 15 MVA

New limiting factor for constraint(s) considered: 11 kV transfer capacity

Detailed description: If the transformers at Spalding primary were uprated to 20/40 MVA units demand could be transferred at 11 kV to deload Spalding Park Road. The viability of this option is subject to a full 11 kV study (to determine what can be transferred on the existing network and the costs associated with building new circuits to facilitate further transfers). This would also alleviate future constraints at Spalding primary itself.

Option 4 – Review seasonal ratings

Viable

Capacity released for constraint(s) considered: Dependent on review

New limiting factor for constraint(s) considered: As before

Detailed description: Overloads are only seen in 2034 for intermediate cool. It is therefore possible that this constraint could be delayed slightly by reviewing NGED's internal policy regarding transformer ratings, which does not currently distinguish between summer and intermediate cool ratings (which may be overly pessimistic). This solution is dependent on an internal review and would not be a long term solution.

Option 5 – Procure flexibility under Spalding Park Road primary

Viable

Flexibility service type: Generation turn up/demand turn down.

Detailed description: Flexibility services could be procured to alleviate the projected overloads seen on the transformers at Spalding Park Road primary. The viability of utilising flexibility will be further investigated as part of the DNOA process.

Solution Recommendation

If a review of the seasonal transformer ratings is able to increase the intermediate cool rating of the transformers at Spalding Park Road this constraint could be mitigated in 2034. Beyond this, capacity could be added at either Spalding primary or Spalding Park Road itself (the former would require transfers at 11 kV but the latter would leave the site limited by 33 kV circuit capacity and is subject to space being available at the site). The requirement for this reinforcement will be assessed in subsequent NDP reports as the loading in the area evolves and DFES forecasts are updated. As load materialises it will also inform the best location to add capacity to the network (i.e. whether load growth is higher nearer to Spalding primary or Spalding Park Road primary).

DSO | nationalgrid electricity distribution

Registered Office: Avonbank, Feeder Road, Bristol BS2 0TB
nationalgrid.co.uk

Contains OS data © Crown copyright and database right 2024

© National Grid 2024