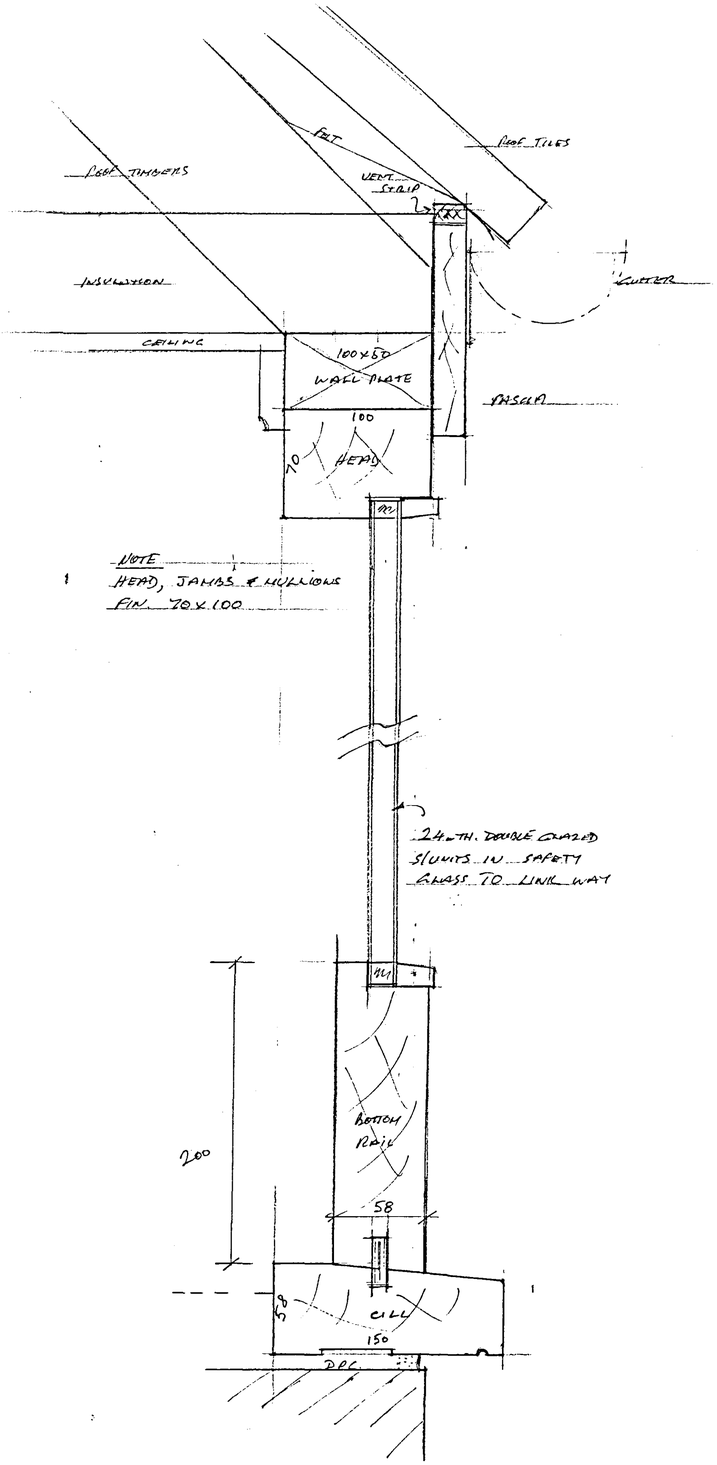

SECTION THRO' LINK WAY 1/2 SCALE

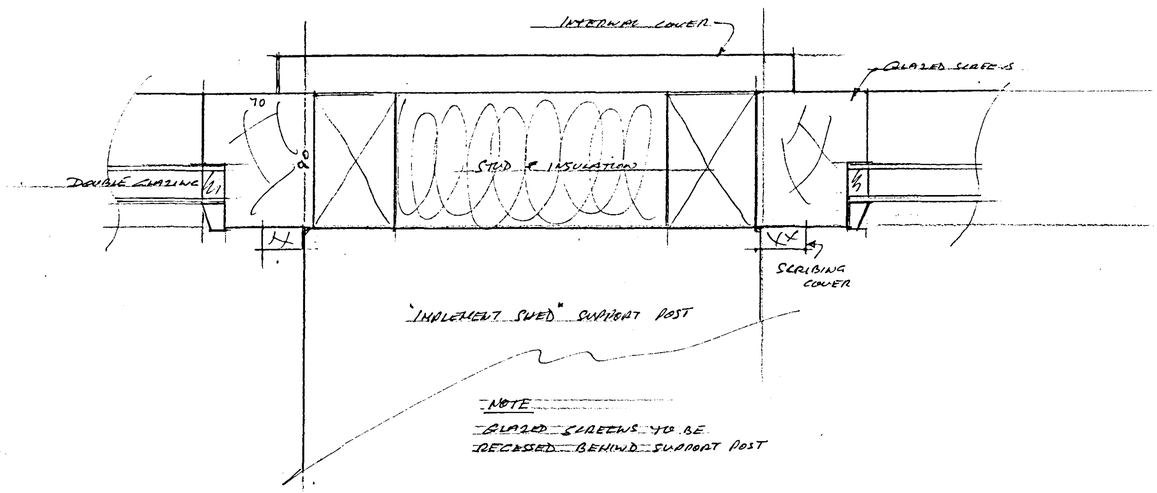

PLAN DETAIL OF GLAZED SCREENS TO KITCHEN/DINER AREA 1/2 SCALE

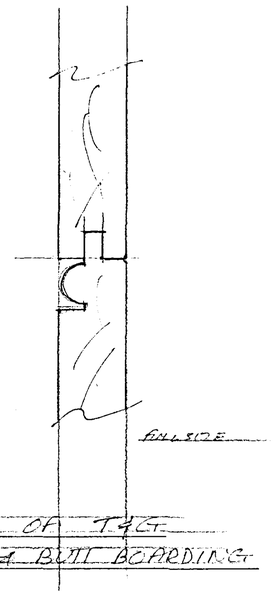

DETAIL OF T&G BEAD & BUTT BOARDING

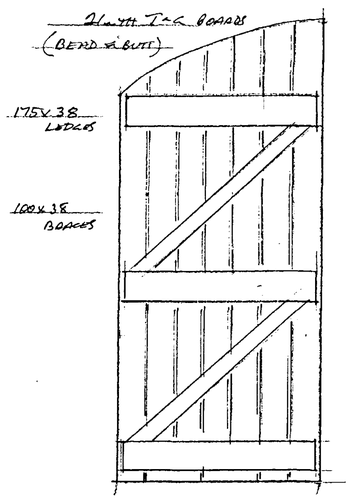

FIXED SHUTTER DETAIL TO ARCHED SCREENS

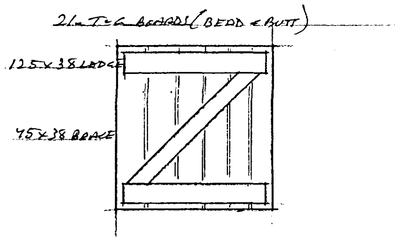

FIXED SHUTTER DETAIL TO SOME WINDOWS

SHDC
Planning & Development
16 APR 2007
Ref: 0497/07

DETERMINED PLAN

PROPOSED BARN CONVERSION
MAISEDYKE LANE FLEET

EXTERNAL JOINERY DETAILS
(LINK WAY/SHUTTERS/MISC.

DRAWN [illegible]	DATE MARCH 07
SCALES AS SHOWN	DRWG NO PEC/SD/02