TREE PROTECTION AND METHOD STATEMENT

INSTRUCTION

This Arboricultural Method Statement was commissioned by the Client to propose a methodology for the management and protection of the trees on or adjacent to the site in order to accompany a planning application. The trees were inspected in line with the recommendations of BS5837: 2012 in March 2019.

TREE WORK

PEOPLE	DUTY	TIME
Suitably qualified person	• carry out the necessary inspections for bats and nesting birds • advise on start date	Before any activity on site
Arboricultural Consultant	• meet with contractors to discuss the treeworks needed	Before any activity on site
Contractor	• produce their own Method Statement for tree works that will include Risk Assessments, staff profiles and certification, machinery and equipment inspection records and certificates	Before work begins
Client	• agree disposal of timber, brash and other arisings	Before work begins

GENERAL

- Tree work must be the first operation, before any other activity on site involving plant, machinery or materials.
- Tree work is skilled and potentially dangerous work, which must be carried out by trained and certificated staff working to BS3998: 2010 and working in accordance with the various Regulations within the Health and Safety at Work Act 1974
- Contractors must have Public Liability Insurance (preferably £5 million) and Employer's Liability Insurance (preferably £10 million)
- Machinery and equipment must be maintained, inspected and operated in accordance with the various Regulations within the Health and Safety at Work Act 1974

WORK REQUIRED

- Remove the following trees:

Ref	Species
Group C (part)	Various
Group E (part)	Hawthorn

- Laterally prune the southern crown of Oak 4883 by up to 2m to facilitate development
- Remove dead wood greater than 25mm diameter from retained trees

TREE PROTECTION

PEOPLE	DUTY	TIME
Arboricultural Consultant	• inspect barriers	Before construction begins
	• attend site during clearance of ditch and installation of headwalls	During installation
Site Manager	• monitor the physical and managed protective tree measures continually	During construction

GENERAL NOTES

- The Site Manager will keep a copy of this Plan on site for reference during construction and for site induction where staff or contractors' work may implicate working near trees so they understand the purpose of the measures.
- No fires will be lit on site where flames can reach within 5m of the crown of a tree taking the size of the fire, wind speed and direction into account
- No storage or discharge of materials within 5 metres of a tree bole.
- No mixing of cement or dispensing of fuel or chemicals within 10 metres of the tree bole.
- Any damage that occurs to the trees during construction will be rectified to BS3998: 2010.
- Trees must not be used as anchor points for winching or for supporting wires/cables.
- Plant will be re-fueled and serviced at least 10 metres from the edge of the Root Protection Areas.
- Any plant with known fuel or other fluid leaks will only be operated near the trees whereby the leaks can be retained in absorbent mats or trays.

GENERAL CONSTRUCTION PHASE

NO.	MATERIALS	NOTES
1	Weldmesh panels on robust scaffold frame	Once the treeworks are complete, a barrier to Fig 2 BS5837 will be erected where shown by the broad blue lines (see notes on barriers below)
2	Scaffold planks Chipped woodmulch or a compressible material	Ground within the root protection areas of trees that cannot be fenced will be protected with scaffold planks laid over a 50mm thick covering of compressible material before any construction starts and be retained in-situ until the end of the main development period. Areas for ground protection are shown by the blue crosshatch on the drawing

NOTES ON BARRIERS

- Weather-proof notices stating: 'PROTECTED AREA – DO NOT ENTER' to be erected on barriers not less than 5m apart. (example on plan)
- Temporary access to protected areas will be by permission of the LPA arboriculturalist.
- The site manager will assess the integrity of the protective barrier protection measures continually. Any shortcomings must be rectified to the original specifications immediately.
- Barriers will remain in place until the end of the main construction period.

NOTES ON EXCAVATION AND CLEARANCE OF DITCH

- Work in the blue 'hound' hatched zone to clear the ditch of silt and undergrowth will be carried out under a watching brief by the Project Arboriculturalist.
- Roots less than 25mm Ø will be ignored.
- Roots greater than 25mm Ø will be retained wherever practical. If root pruning is required, the work will be carried out by the Project Arboriculturalist using sharp bypass secateurs in accordance with British Standard 3998: 2010 'Tree work – recommendations'.

NOTES ON INSTALLATION OF SERVICES

- Any trenching and excavation for ditch headwalls will be carried out under a watching brief by the Project Arboriculturalist.
- Roots less than 25mm Ø will be ignored.
- Roots greater than 25mm Ø will be retained wherever practical. If root pruning is required, the work will be carried out by the Project Arboriculturalist using sharp bypass secateurs in accordance with British Standard 3998: 2010 'Tree work – recommendations'.

POST CONSTRUCTION

- Once all the construction and hard landscaping works are completed, the protective barriers and ground protection will be removed before landscaping work begins.
- Soil cultivation within the previously protected zones will be carried out by hand only. No machine cultivation will take place within these zones whatsoever.
- Planting within the previously protected zones will be carried out by hand using hand tools only.
- Retained trees must be re-inspected post-development or annually by a qualified arboriculturalist and any works arising carried out within the time limits specified.

NOTES ON PAVING

- Paving laid within root protection areas will be constructed with a minimum of excavation. Excavation will be limited to 50mm below the existing ground level.

PROTECTED AREA

DO NOT ENTER

(WITHOUT PERMISSION)

This barrier is designed to protect these trees.

PLEASE REPORT ANY BREACH IN THE BARRIER TO THE SITE MANAGER

Figure 2 **Default specification for protective barrier**

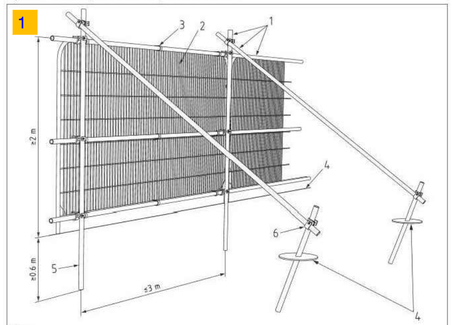

Key

1 Standard scaffold poles
2 Heavy gauge 2 m tall galvanized tube and welded mesh infill panels
3 Panels secured to uprights and cross-members with wire ties
4 Ground level
5 Uprights driven into the ground until secure (minimum depth 0.6 m)
6 Standard scaffold clamps

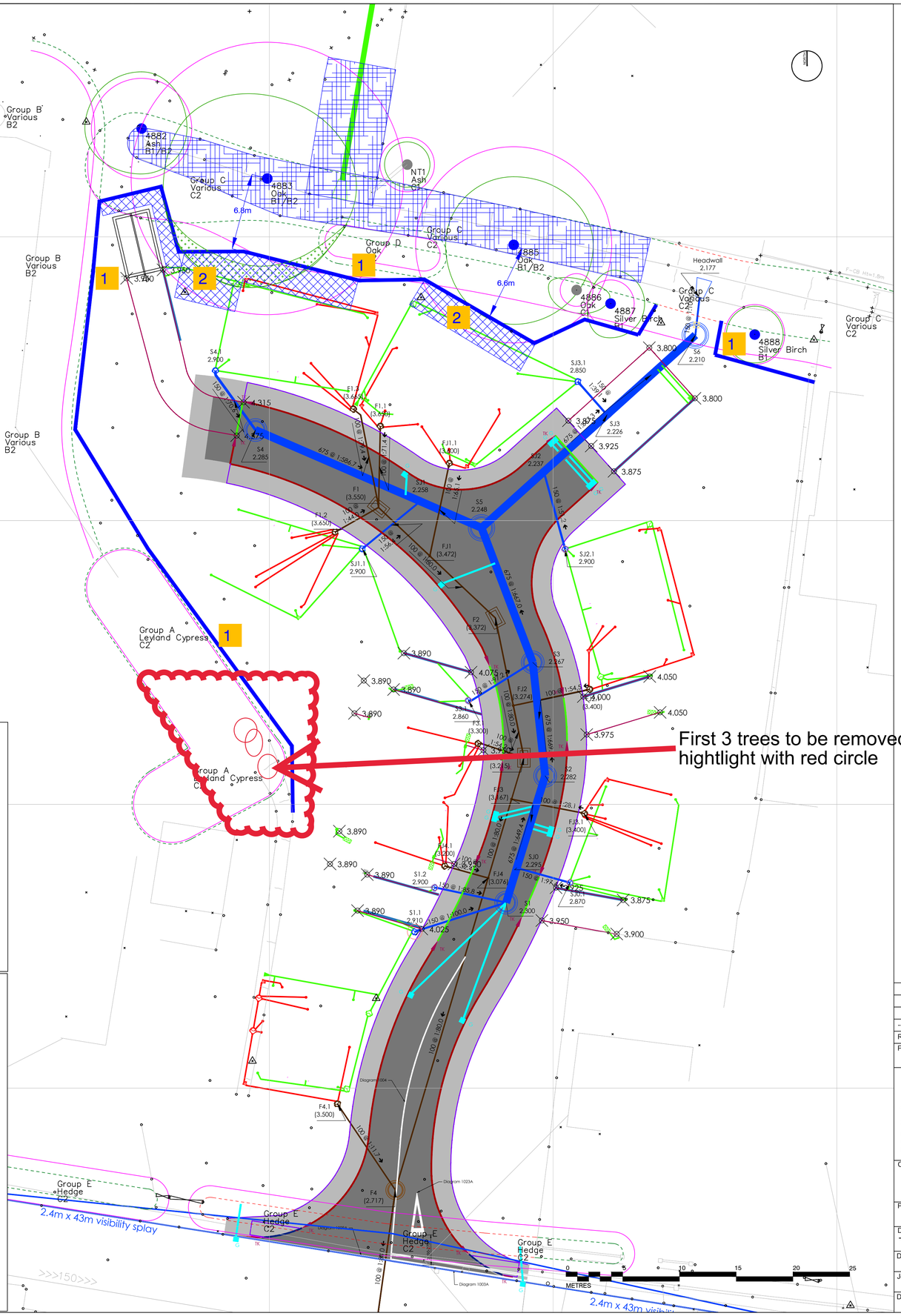

This drawing is the property of Andrew Belson Arboricultural Consultant. Copyright is reserved by him and the drawing is issued on the condition that it is not copied, reproduced, retained nor disclosed to any unauthorized person either wholly or in part without the consent of Andrew Belson.

NOTES: Based on topographical survey drawing SL2809/1 and drainage plan 356.FH.100

The original of this drawing was produced in colour – a monochrome copy should not be relied upon

KEY

- ROOT PROTECTION AREA
- CANOPY OUTLINE - INDIVIDUAL TREE
- CANOPY OUTLINE - GROUPS
- TREES TO BE REMOVED
- BARRIER TO FIG 2. BS5837
- AREAS FOR PRUNING
- CAREFUL WORK UNDER A WATCHING BRIEF BY PROJECT ARBORICULTURALIST
- GROUND PROTECTED WITH BOARDS

Rev	Description	Date
--	--	--

Purpose of Issue
Planning

Andrew Belson
Arboricultural Consultant
The Tree House, 1a First End
Station Road, Uppingham
Oakham
LE15 9TX
t: 01572 823637
e: info@belsontreesurvey.co.uk

Client
Seagate Homes Ltd

Project
Old Main Road, Fleet Hargate

Drawing Title
TREE PROTECTION PLAN

Drawn	Checked	Reviewed	Date
AMB	--	--	15/04/2021
Job No.	Scale	Sheet Size	Revision
3672	1:200	A1	—

Drawing Number
3672.Fleet Hargate Drainage.Studio 11.TPP