Owls Hall®
ENVIRONMENTAL

This information is brought to you by Owls Hall Environmental working in partnership with Klargester products.

Excellent Treatment

0845 375 1801

www.ohel.co.uk

Environmental

Klargester BioDisc® BE-BL

High Performance Package Sewage Treatment Plants for Residential, Business & Leisure Applications

Sustainable, Reliable, Affordable

Kingspan®

Klargester BioDisc® BE-BL from Kingspan Environmental

The Klargester BioDisc® utilises proven rotating biological contactor (RBC) technology, and this new range of larger BioDisc® treatment plants now enables Kingspan Environmental to offer solutions against a much wider range of applications.
All Kingspan Environmental treatment plants are delivered direct to site and ready to install.
The process is self-establishing, and does not require the addition of cultures or chemicals.

Improving environmental standards, more stringent controls, new European guidelines and the introduction of new Building Regulations have placed greater responsibility on specifiers and users to ensure they select the correct treatment system for their application. Klargester BioDisc® treatment plants have been designed to provide an engineered package solution to meet a wide range of applications and discharge qualities.

Assured Performance

The nature of wastewater has changed over the last few decades. In recognition of this, Kingspan Environmental's unique patented Managed Flow System has been specifically designed to maintain optimum performance despite shock organic loadings and hydraulic surges. The detrimental effects of modern disinfectants and cleaning materials are minimised by the managed flow system.

Commercial Applications

Certain commercial applications, such as pubs, clubs, hotels and industrial units, place additional stresses on the wastewater treatment process. The sewage strength from the cocktail of detergents, cleaners, and chemicals demands a greater treatment capacity than a purely residential application. In such instances Kingspan Environmental can advise on the best possible treatment and BioDisc® can meet your requirements efficiently and cost-effectively.

Long Term Peace of Mind

All packaged wastewater treatment plant require periodic servicing. A service and preventative maintenance programme prolongs the life of the plant and identifies and rectifies problems before they become serious. As part of this maintenance package, Kingspan Environmental inform end users on the mechanical, electrical and process performance of equipment. Kingspan Environmental offer a range of alarm systems to alert the end user to mechanical failure. The installation of such is required under BS EN 12566-3 (BioDisc® BE-BF units only).

Process Design

The Klargester BioDisc® uniquely provides four separate treatment zones within a single vessel.

Primary Settlement Section 1 : Wastewater enters the primary chamber. Solids and heavy particles, including non-biodegradable items, settle and consolidate into a sludge which requires periodic removal. Liquid still containing some solid particles rises upwards into the **Primary Biozone 2 :** Discs in this area, rotating at approximately two revolutions per minute, allow oxygen to be absorbed into the developing biofilm as naturally occurring bacteria attach to the discs. These discs provide a highly beneficial pre-treatment area.

Flow Management Device 3 : Forward flow is controlled by a baling device attached to the rotor assembly and a pre-determined volume of partially treated waste is transferred into the secondary disc zone. Incoming flows in excess of the baling device capacity stay in the primary area and it is this that creates hydraulic balancing within the plant. Zones 1 and 2 (as above) between them have a balancing capacity equal to approximately 25% of the design flow of the plant and it is this feature that can allow the plant to retain six hours flow in the event of a power failure. **This is now a requirement under the latest Building Regulations Part H2**.

Secondary Disc Zone 4 : Flows entering this zone are exposed to a second and separate bank of discs on which grow a further matrix of bacteria. Protected from flow variation and harmful contaminants, the bacteria efficiently use the nutrients in the effluent as a food source.

The rotation of the discs creates a gentle flow path within both disc zones that moves wastewater along the zone and rotation also sloughs ageing or surplus bacteria from the discs creating space for new bacteria to develop.

A key benefit of BioDisc® is that the whole surface area is continually regenerated with new biological growth and that there is constant replenishment as all spent bacteria are flushed into the final settlement zone.

It is often the case with submerged or fixed media treatment processes, that the biological zones become clogged with dead or excessive biological growth, inhibiting treatment and demanding expensive and dirty maintenance.

Final Settlement Zone 5 : The almost fully treated effluent, is displaced from the disc area into the final settlement zone. The final settlement zone is fitted with a simple sludge return pump that transfers the settled material from the base of this zone into the primary settlement zone. This improves process performance by protecting the outlet and returning dilute and active biomass into the primary tank. This feature can be modified for seasonal flow variations.

The final effluent, free from solids and pollutants, exists through the outlet pipe.

Process Features

- Kingspan Environmental Patented Flow Management (KEPFM)
- No process maintenance required
- Simple mechanics
- Self generating bacteriological process
- KEPFM provides the capability to adjust plant performance
- Compliance with BS EN 12566-3 (BioDisc® BE-BF units only), BS 6297 and Building Regulations Part H2
- Sludge return pump in final settlement tank to enhance performance. Sludge return can be configured to help overcome seasonal flow variations
- No odour or environmental nuisance
- Silent in operation

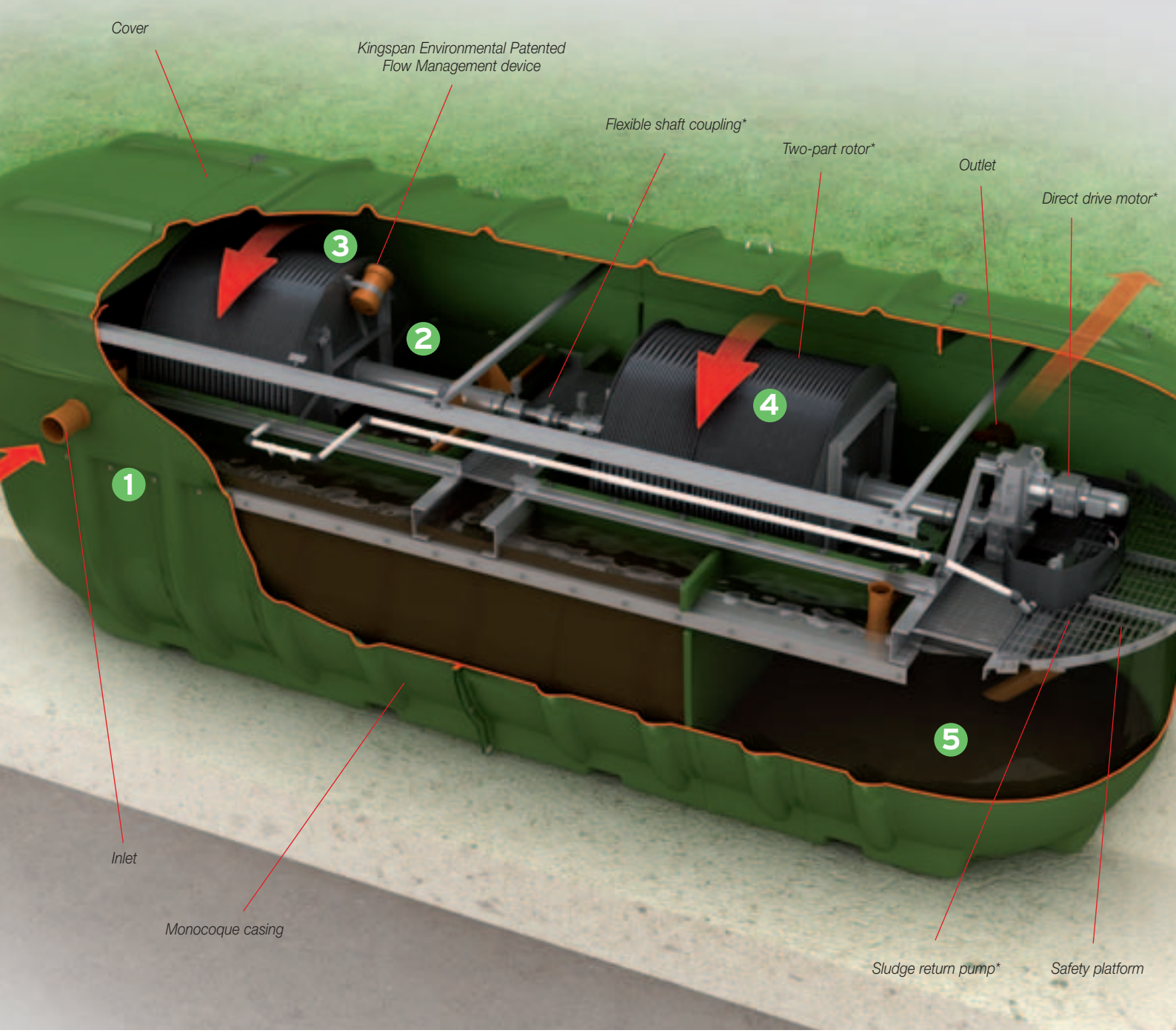

** BioDisc® BH-BL only.*

Consistent Effluent Quality

These plant are designed to achieve an effluent quality of 20mg/l BOD, 30mg/l Suspended Solids and 20mg/l Ammonia on a 95% basis. These BioDisc® can also be configured to produce better standards of effluent quality with Ammonia levels as low as 5mg/l being achievable. Contact Kingspan Environmental for design support and further information.

- The systems are designed to deal with flows up to 3xDWF.
- Applications where commercial catering takes place will generate significant volumes of grease which should not be allowed to enter any treatment system.
- Kingspan Environmental manufacture a wide range of grease traps and their specialist advice should be sought in these types of applications.
- The treatment of sewage from applications other than domestic housing can often demand special precautions, therefore specialist advice should be sought from Kingspan Environmental.

Effluent Pumpsets

A septic tank or treatment system pumpset can be used to disperse settled effluent when a site has a high water table or adverse invert levels. Installed after the treatment system and pumping settled effluent up to an inspection chamber, flow to the drainage system then takes place by gravity in the normal way.

Standard BioDisc® Single Piece System

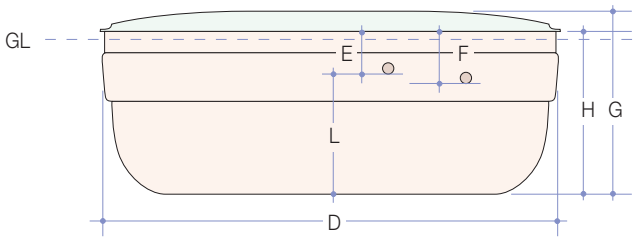

Note: Illustration is a schematic, do not use for installation. Refer to customer drawings for true pipework orientation.

The loadings given in the chart below are representative of typical domestic housing applications. The sizing of sewage treatment plant requires specialised knowledge and experience. Please consult Kingspan Environmental for an assessment of your application.

G.L. = Ground Level

Unit Size	BE	BF	BG	BH	BJ	BK	BL
Maximum Daily BOD (kg)	2.1	3.0	4.2	4.5	6.0	7.5	9.0
Maximum Daily Flow (m^3)	7	10	14	15	20	25	30
D Length (mm)	3340	4345	5235	7755	7755	7755	7755
Width (mm)	2450	2450	2450	2455	2455	2455	2455
E Inlet Invert depth (mm)	600	600	600	600	600	600	600
L Depth below inlet invert (mm)	1825	1820	1820	1790	1790	1790	1790
F Outlet Invert Depth (mm)	685	700	700	750	750	750	750
G Overall Height (mm)	2825	2825	2875	2830	2830	2830	2830
H Height to rim of cover (mm)	2485	2485	2485	2500	2500	2500	2500
Empty Weight (kg)	1200	1315	1660	3000	3100	3200	3300
Standard Power Supply	1 phase	1 phase	1 phase	3 phase	3 phase	3 phase	3 phase
Optional Power Supply	3 phase	3 phase	3 phase	1 phase	1 phase	1 phase	1 phase
Motor Rating - 1phase/3phase (watts)	75/60	120	180	250	250	370	370
Full load current 1 phase (amps)	1.10	1.26	1.70	1.95	1.95	2.35	2.35
Full load current 3 phase (amps)	0.35	0.42	0.63	0.88	0.88	1.35	1.35
Sludge Return Pump Rating (watts)	-	-	250	480	480	480	480

Please refer to Kingspan Environmental for specialist advice for applications where primary settlement tanks or pump stations may be required.

Kingspan Environmental

Klargester BioDisc® BE-BL from Kingspan Environmental

Sample Chambers

When a treatment plant discharges, it is a regulatory requirement to have a sampling point so that the effluent quality can be periodically checked by regulatory bodies.

Available to suit all outlet depths of our standard ranges, a Kingspan Environmental sample chamber provides the solution, enabling both quick installation and easy access for accurate and convenient effluent testing.

Safety Features

- Low profile lockable covers
- Fully removable covers to ease maintenance, simplify de-sludging and provide a safe working environment without the need for restricted access provision, a requirement of the Confined Spaces Regulations 1997
- Full platform access to motor and bearings
- Secure lockable control panel
- Integrated loss of rotation alarm (optional on BE-BG, standard on BH-BL)

Control Panel

The plant are supplied with either a single phase or a three phase direct drive motor and come complete with a control panel and feature:

- inversion device included within the panel*
- single phase power supply to the panel converted within the panel to three phase prior to connection to the drive motor

Low Operating Cost

BioDisc® has proven track record for high quality performance, reliability and low operational costs and the new range incorporates features that further enhance that reputation:

- designed to run from either a single phase or 3 phase power source
- require 60 to 370 watt motors, offering the lowest running costs of any plant in their class

Direct Drive

The disc assembly rotates through the sewage effluent and supports the growth of a biological matrix. When fully loaded with saturated bacteria the disc assembly becomes heavy, therefore both drive and rotor design are critical. Kingspan Environmental have many years experience in this field and these new products provide a number of new features:

- direct drive motor which is fixed directly to the disc shaft*
- no requirement for chain or belt drive**
- reduced and simplified maintenance

Two-Part Shaft

A two-part shaft has been incorporated to simplify maintenance and reduce bearing wear. The new Kingspan Environmental two-part shaft assembly:

- supports the rotor in four places rather than two
- significantly reduces the load and wear on the shaft and bearings
- features bearings selected for long life
- features bearings fitted with automatic grease capsules that only require annual replacement
- simplifies installation by reducing potential drive alignment and bearing wear problems sometimes associated with long single shaft motors

Rotor Design

New range includes the well established Kingspan Environmental rotor design which:

- is compact and structurally sound
- is designed and built for long life without the need for rotor maintenance often associated with sectional bolted rotor assemblies

Monocoque Casing

All BioDisc® in this range utilise the same casing, providing:

- lightweight, yet robust and structurally strong GRP construction for easy on-site handling
- steel cradle integrated into the casing provides stable platform for mechanical components
- factory pre-engineered to exacting Kingspan Environmental standards, ensuring consistent high quality and eliminating on-site assembly
- full length ports providing quick and easy access for desludging
- 600mm invert depth, with only 150mm head loss through the plant
- variable desludging/emptying cycles

** BioDisc® BH-BL only.*
***BioDisc® BH-BL only - chain drive on BioDisc® BE-BG.*

Kingspan Environmental

Kingspan Environmental Solutions

Commercial Sewage Treatment Plants

Large Capacity Pumping Stations

Stormwater Attenuation Systems

Residential & Commercial Rainwater Harvesting

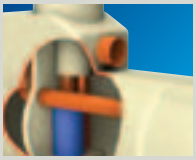
Oil/Water Separators

Domestic Sewage Treatment Plants

Packaged Pump Systems

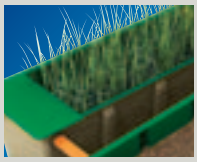
Reed Beds

Domestic Rainwater Harvesting

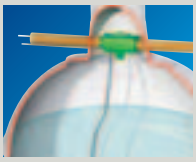
Garden Watering Systems

Septic Tanks

Below Ground Storage Tanks

Grease & Silt Traps

Kingspan Environmental Approved Installers

Strategically located throughout the UK and Ireland, Kingspan Environmental Approved Installers are appointed following rigorous selection procedures which assess their installation expertise, reputation and financial status.

These performance criteria, together with their design skills and knowledge of Kingspan Environmental products are also reviewed on an annual basis to ensure that the highest levels of professionalism are maintained.

Kingspan Environmental Service

Kingspan Environmental have a dedicated service division providing maintenance for wastewater treatment products. Factory trained engineers are available for site visits as part of a planned maintenance contact or on an 'on-call' basis.

Unique Customer Care

Kingspan Environmental offers a unique and comprehensive care package both before and after supply. Throughout the UK and Ireland, our team of service engineers is always on hand to ensure that Kingspan Environmental products provide their owners with a long and cost-effective life. Call our Customer Care Department for further information.

Free Site Visit

To help determine your exact requirements, Kingspan Environmental offer free site visit support from our team of specialist Area Sales Managers. Please call, fax or click for more information.

In keeping with Company policy of continuing research and development and in order to offer our clients the most advanced products, Kingspan Environmental reserves the right to alter specifications and drawings without prior notice.

BRITISH WATER

This brochure is printed on paper made from 80% post-consumer waste and 20% virgin pulp.

Kingspan®

Kingspan Environmental

UK: College Road North, Aston Clinton, Aylesbury, Buckinghamshire HP22 5EW
Tel: +44 (0) 1296 633000 Fax: +44 (0) 1296 633001
Tel: +44 (0) 1264 353222 Fax: +44 (0) 1264 353122
Scottish Office: Tel: +44 (0) 1355 248484

Ireland: Unit 1a, Derryboy Road, Carnbane Business Park, Newry, Co. Down BT35 6QH
NI Tel : +44 (0) 28 302 66799 Fax: +44 (0) 28 302 60046 **ROI** Tel: +353 (0) 48 302 66799 Fax: +353 (0) 48 302 60046

email: klargester@kingspanenv.com

Visit our website **www.kingspanenv.com**, or our group website **www.kingspan.com**

Issue No. 1: November 2008

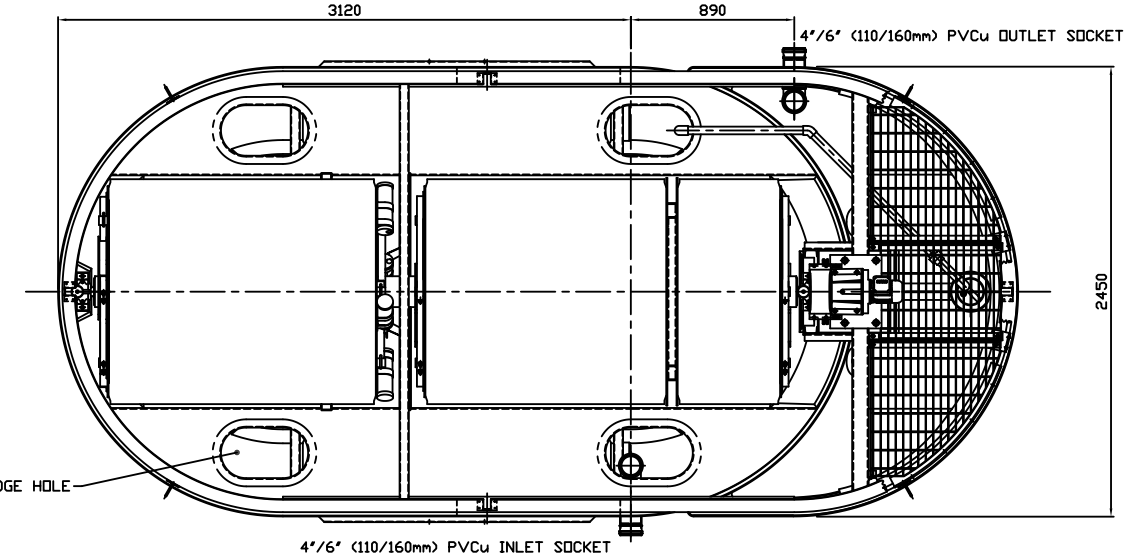

PLAN VIEW WITH TOP COVER REMOVED

NOTES

1. BIODISC TANK AND COVER ARE MANUFACTURED IN GLASS REINFORCED POLYESTER (G.R.P.). COVER IS FINISHED IN GREEN TO B.S.4800 TINT 12:B:25
2. ELECTRICAL SUPPLY: 240 VOLTS, 2amps, SINGLE PHASE (THREE PHASE OPTIONAL) CONTROL PANEL SUPPLIED.
3. BIODISC MUST BE LIFTED BY THE LIFTING POSITIONS PROVIDED.
4. FOR INSTALLATION, MAINTENANCE AND DESLUDGE DETAILS REFER TO PROCEDURE DOCUMENTS SUPPLIED WITH UNIT.

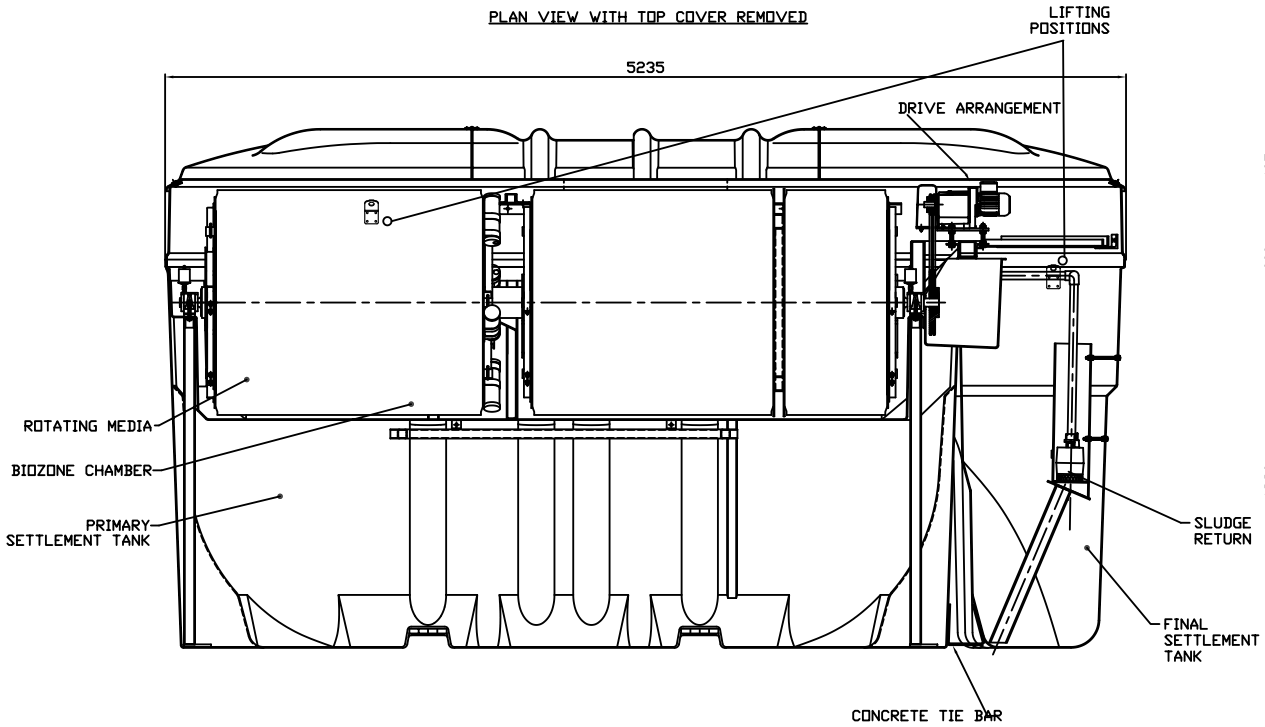

COVER, TOP SECTION, BASE & BIOZONE TANK SECTIONED ON CENTRE LINE FOR CLARITY.

SLUDGE RETURN OMITTED FOR CLARITY

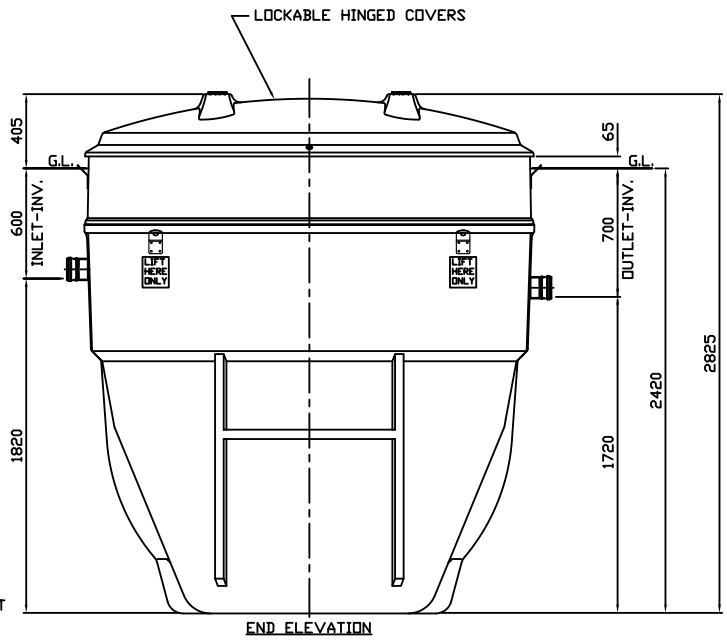

END ELEVATION

APPROX. DRY WEIGHT	1660 Kg

ISSUE	DATE	DRAWN	MODIFICATION
1	17.05.10	J.C	INITIAL ISSUE CC841

This drawing is copyright and may not be reproduced or used without the written permission of Kingspan
KINGSPAN RESERVE THE RIGHT TO CHANGE SPECIFICATIONS WITHOUT NOTICE

THIRD ANGLE PROJECTION

ALL DIMENSIONS ARE IN MILLIMETRES – DO NOT SCALE

Kingspan Environmental

TITLE: BG BIODSC GENERAL DIMENSIONS

SCALE 1:15 | SHEET SIZE A1

DRAWING No. DS0499P | ISSUE 1

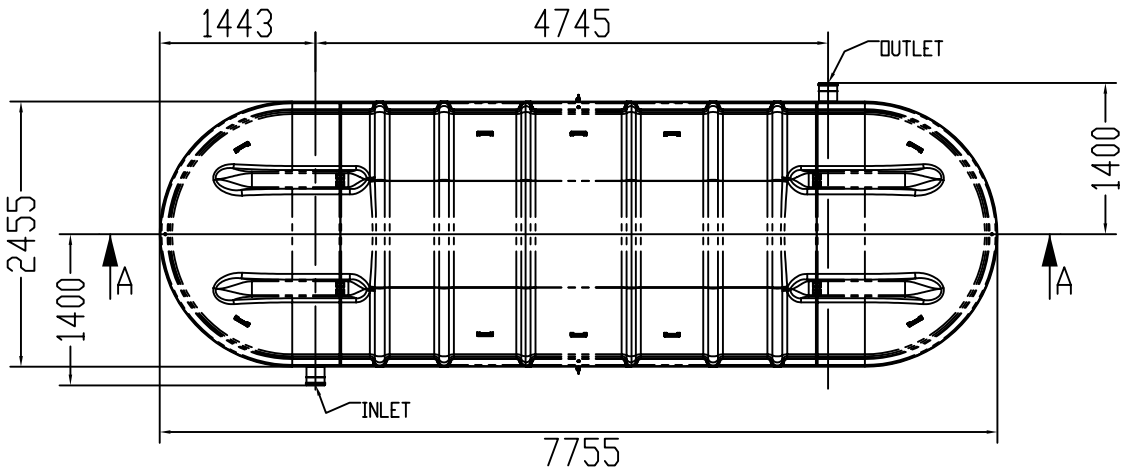

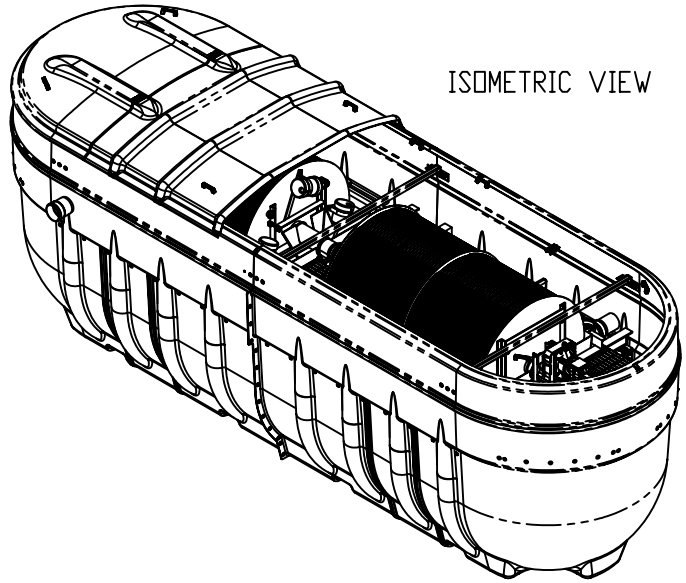

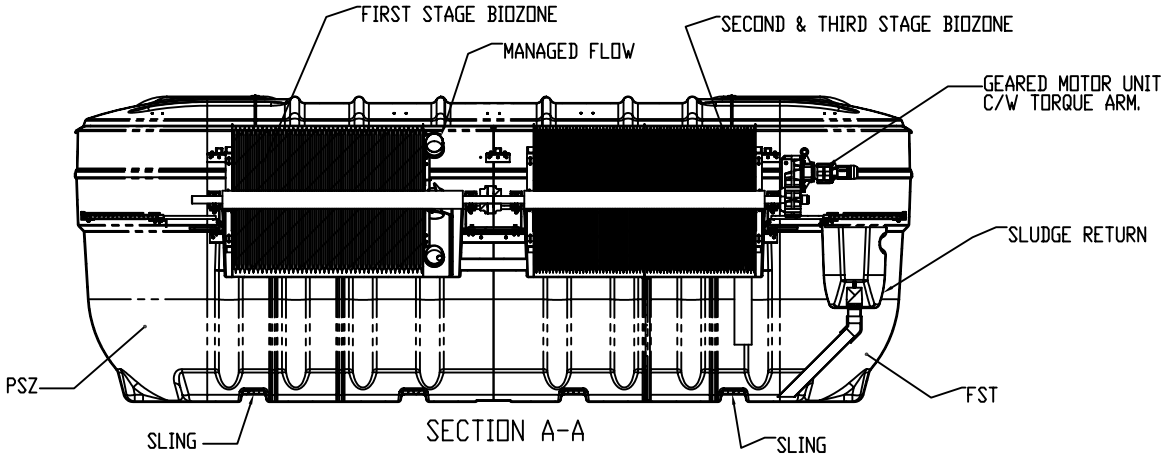

NOTES

1. ALL INLET AND OUTLET PIPEWORK TO BE 6" PVCu.
2. OVERALL DIMENSIONS ONLY GIVEN.
3. UNIT MUST BE SLUNG IN POSITIONS SHOWN.

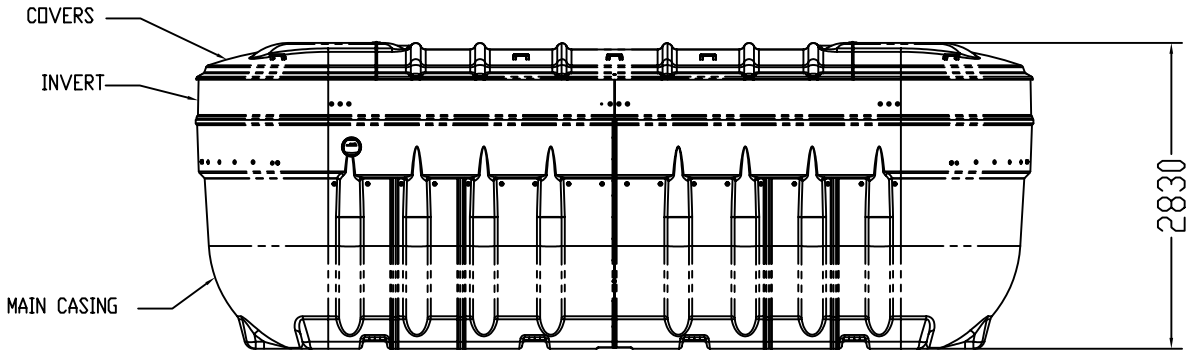

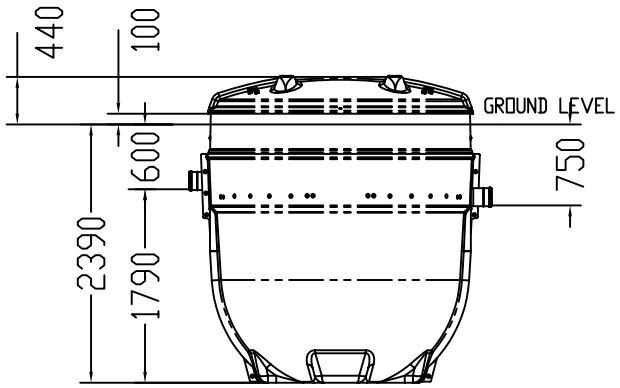

Please check with Environmental Treatment Services Ltd that this drawing is the latest issue			
Issue	Date	Drawn by	Description
02			
01	01/06/10	J.McM	Initial Release - Kingspan Brand

Material : Various	Tolerance : n/a
Finish : n/a	Thickness : n/a
Weight : ---- kg	Surface Area : n/a

Drawing : DS0721P

BH-BL BioDisc General Arrangement

All dimensions in mm

Scale: Not to scale

Kingspan Environmental reserve the right to alter the details of this drawing without prior notice. This drawing is copyright and may not be reproduced or used without the written permission of Kingspan Environmental

Kingspan Environmental