SUPPLEMENT TO NO.6 ANY OTHER INFORMATION

In order to maintain a continuous supply of good quality summer flowers to our customers, being local packers/suppliers to the supermarkets and the wholesale markets, this development will provide temporary cost effective protection from the elements, during the final weeks of their growing cycle, and to aid in harvesting.

The site area being chosen by the limited amount of good quality land close to the nursery needed for intensive horticulture. The area outlined in yellow being this good grade I land the rest of field 7568 being grade III.

This area has been used for many years for flower production.

We have applied for Lincolnshire Objective 5G Grant funding through the LOC (Lincolnshire Ornimental Challenge). Planning permission being a criteria to be successful for this grant funding.

The structures themselves will be used from May to November, during the winter months the plastic covers will be removed.

7 FEB 2008
Ref: 0146/66

01205 821344

Haygrove TUNNELS Ltd

Complete Tunnel Systems

HAYGROVE TUNNELS

DETERMINED PLAN



Strawberry Tunnels.

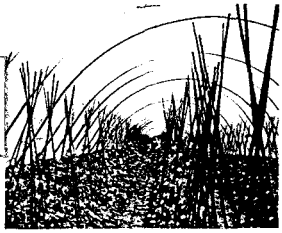

Runner Bean Tunnels.



Sugar Snap Tunnels.

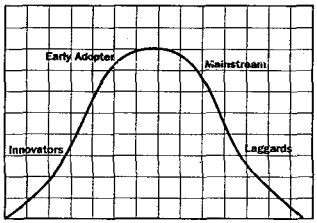

The Early Adopters Earn.



Raspberry Tunnels.

Designed and developed by Growers for Growers

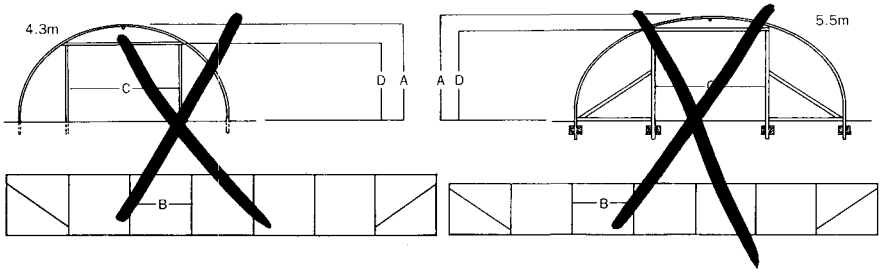

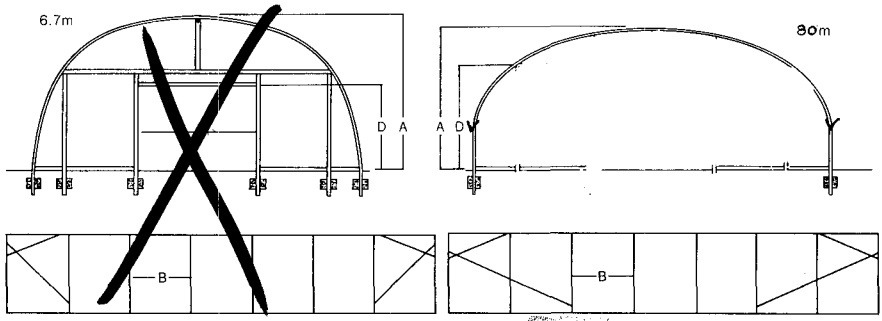

-7 FEB 2000
Ref: 0146/00

FORDINGBRIDGE TUNNELS SPECIFICATION							
Width of structure		4.3m	5.5m	6.7m	8.0m	4m spec	9m projects
Dimensions							
Nominal height to ridge	A	2.3m	2.3m	3.0m	3.0m	Max 4.5m	
Section length	B	2.3m	2.3m	2.3m	2.3m	0.5m–3m	
Maximum door width	C	1.2m	2.3m	2.3m	n	6.5m	
Maximum door height	D	1.2m	2.3m	2.3m	n	3.5m	
Width of cladding required							
For trenching into ground		7.1m	11.1m	13.3m	1 3m	7m–9m	
For ground cladding rail		7.1m	9.5m	11.1m	13.3m		
For 1m high side rail		7.1m	7.5m	9.1m	11.0m		
Materials specifications							
Foundation tube Dia × wall thickness		35 × 2mm	45 × 2mm	60 × 1.6mm	60 × 1.6mm	25–60mm	
Galvanised hoop		35 × 2mm	45 × 2mm	60 × 1.6mm	60 × 1.6mm	25–60mm	
Galvanised ridge		25 × 1.6mm	35 × 2mm	45 × 2mm	45 × 2mm	25–60mm	
Galvanised windbraces		25 × 1.6mm	35 × 2mm	35 × 2mm	35 × 2mm	25–60mm	
Timber end frames		75 × 50mm	75 × 50mm	75 × 75mm/ 75 × 50mm	75 × 50mm	Max 100 × 100mm	
Nominal clearance from outside edge of hoop							
0.5m	E	1.1m	1.1m	1.1m	1.5m		
1.0m	F	1.6m	1.6m	2.1m	2.1m		
1.5m	G	2.1m	2.1m	2.1m	2.4m		
2.0m	H		2.1m	2.1m	2.6m		
2.5m	J			3.0m	2.7m		
3.0m	K				2.8m		
3.5m	L				2.9m		

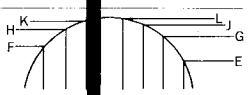

Fordingbridge Limited, Arundel Road, Fontwell, Arundel, West Sussex, BN18 0SD
FAX Chichester (0243) 554433. TELEPHONE Chichester (0243) 554455

Although the information given in this brochure is correct at the time of printing we are continually seeking improvements to our products and we reserve the right to alter specifications without prior notice.
January 1990

DETERMINED
PLAN

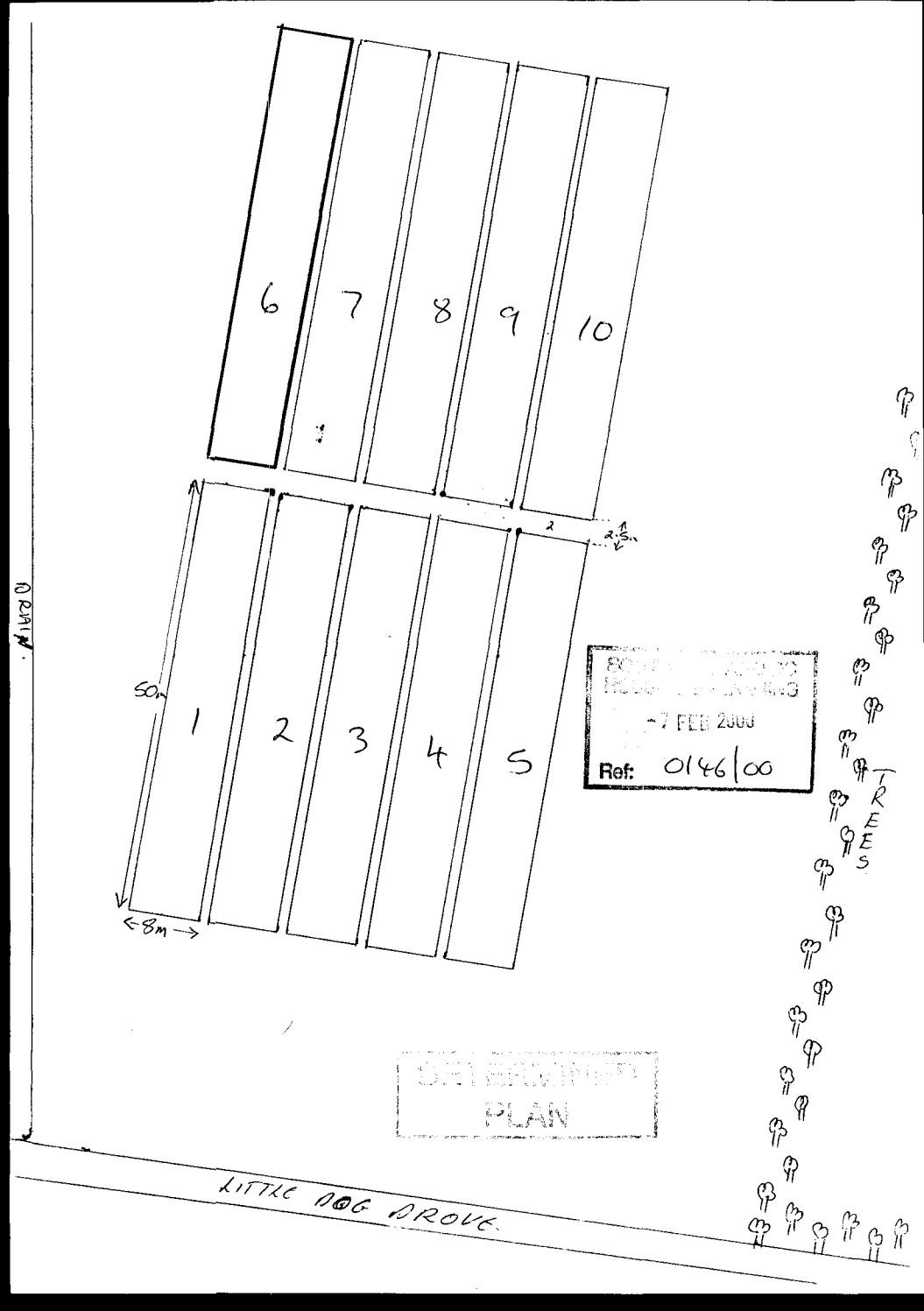
6
7
8
9
10
1
2
3
4
5
2
2.5m
50m
8m
DRAIN
TREES
LITTLE DOG DROVE
-7 FEB 2000
Ref: 0146/00
PLAN