

ELEVATION TO WEST END

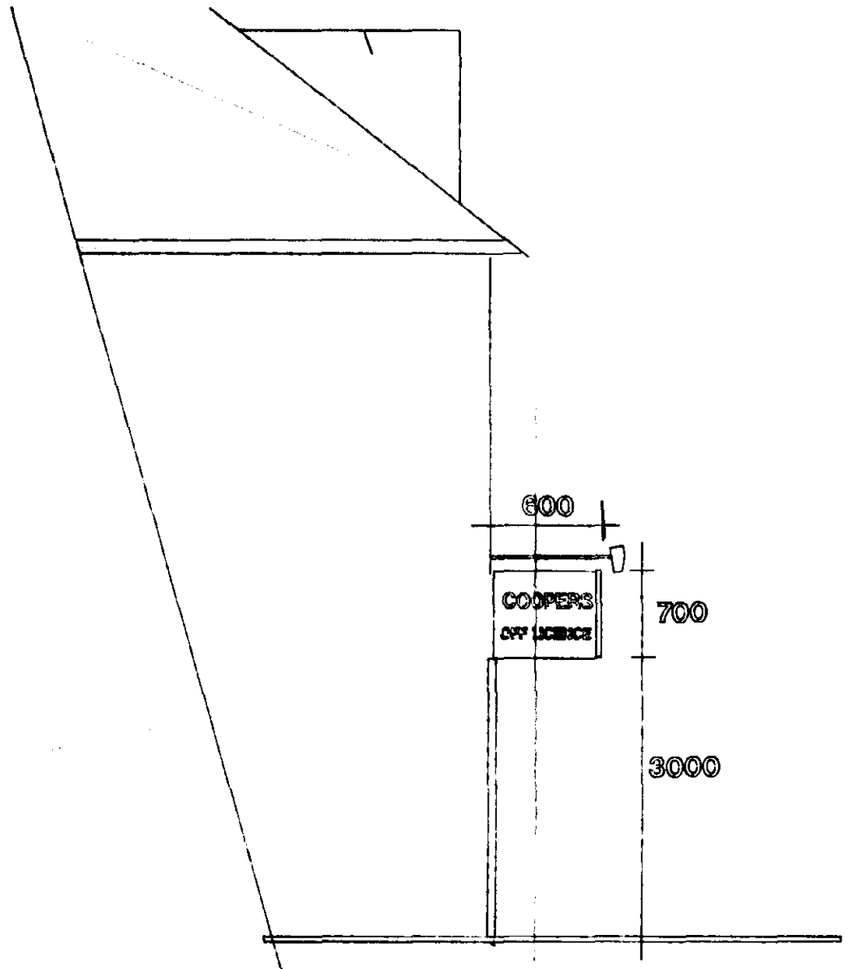

SIDE VIEW

SEE
SEPARATE
BLOCK PLAN

SPECIFICATION: TO SUPPLY AND INSTALL ONE NON-ILLUMINATED FASCIA SIGN TO AN OVERALL SIZE OF 9500mm x 700mm
SIGN TO COMPRISE OF A PAINTED GREEN ALUMINIUM FRAME HOUSING A GREEN ACRYLIC FASCIA PANEL.
FACE OF PANEL SURMOUNTED WITH RAISED CREAM LETTERS FOR NAME AND ORANGE LOZENGE BEHIND AND ALSO RED AND ORANGE DIAMONDS TO EITHER END FLAT APPLIED.
OVERHEAD ILLUMINATION TO BE PROVIDED BY FIVE NUMBER TUNGSTEN DOWNLIGHTERS IN POSITIONS SHOWN.

SOUTH HOLLAND DC
HOUSING & PLANNING
19 MAY 1997
Ref: 0565/97

No.	DATE	SCALE	PROPOSED DISPLAY FOR:-	
on512	APRIL'97	1 : 10	B. & S.D.COOPER LONDIS FOODSTORE COOPERS SUPERMARKET, 28, WEST END, HOLBEACH, SPALDING, LINCS. PE12 7LW	The Sign & Blind Design Centre Ltd., UNITS 22/23, TRANSPORT WHARF, DICKERAGE LANE, NEW MALDEN, SURREY KT3 3SF Tel: 0181-336 1620 Fax: 0181-336 1621