Contractors are responsible for checking all dimensions on site prior to work commencing.Due to areas of the structure being covered, unexposed or otherwise inaccessible the notes / specifications of existing materials are subject to confirmation of site when it is feasible to expose the relevant areas of construction. All material schedules are given in good faith and for pricing purposes only. It is the responsibility of the contractor to check their accuracy before ordering any materials. Remway Design accepts no responsibility for the accuracy of these material schedules.

A
3

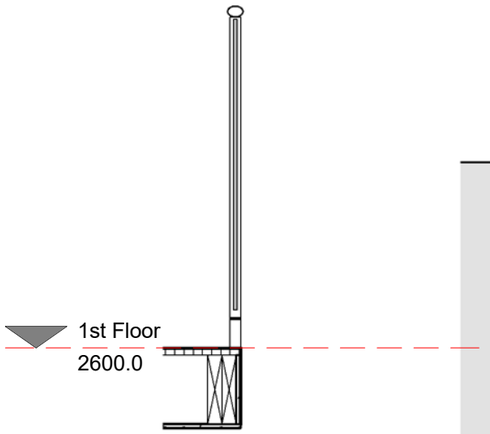

glass balustrade section
1 : 20

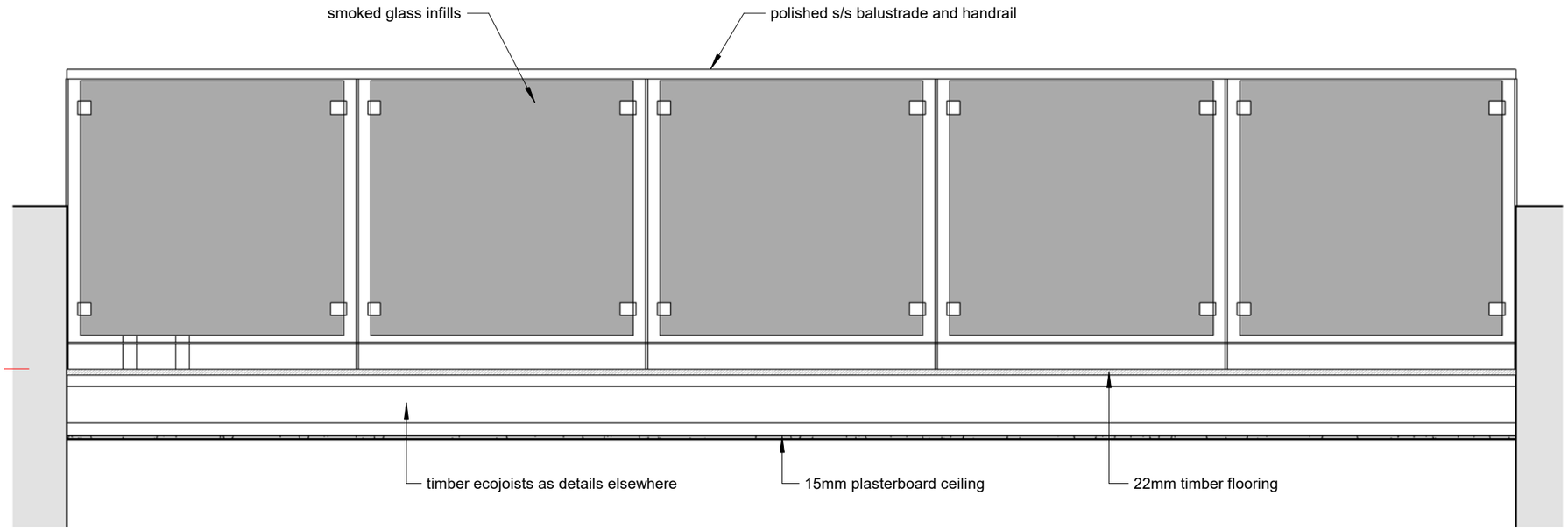

Glass Balustrade Elevation
1 : 20

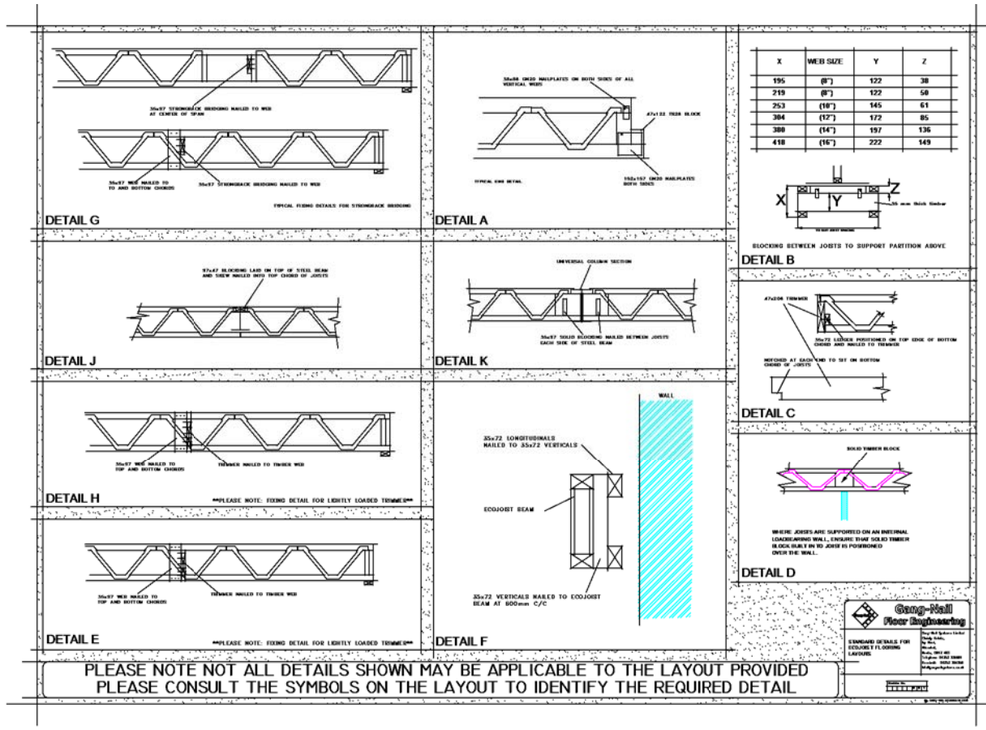

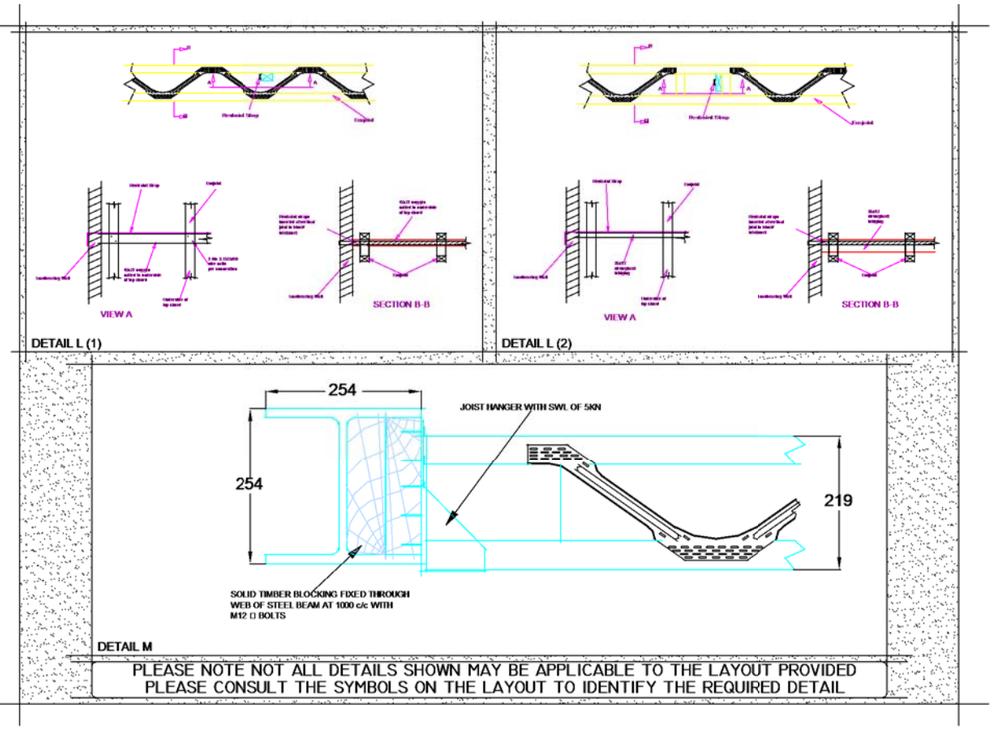

The Old Chapel | Hobeach St Matthew **balustrade & joist details**

Drg No **2690 / 12**

remway Design Ltd