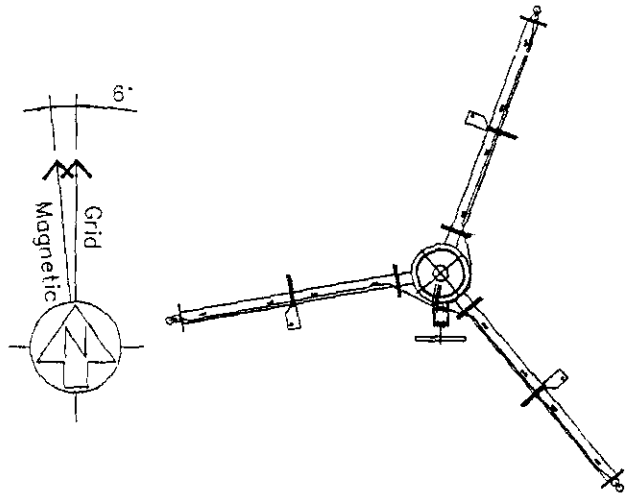

PLAN ON TOWER @ 15m
ANTENNA CONFIGURATION 11

(SCALE 1:50)

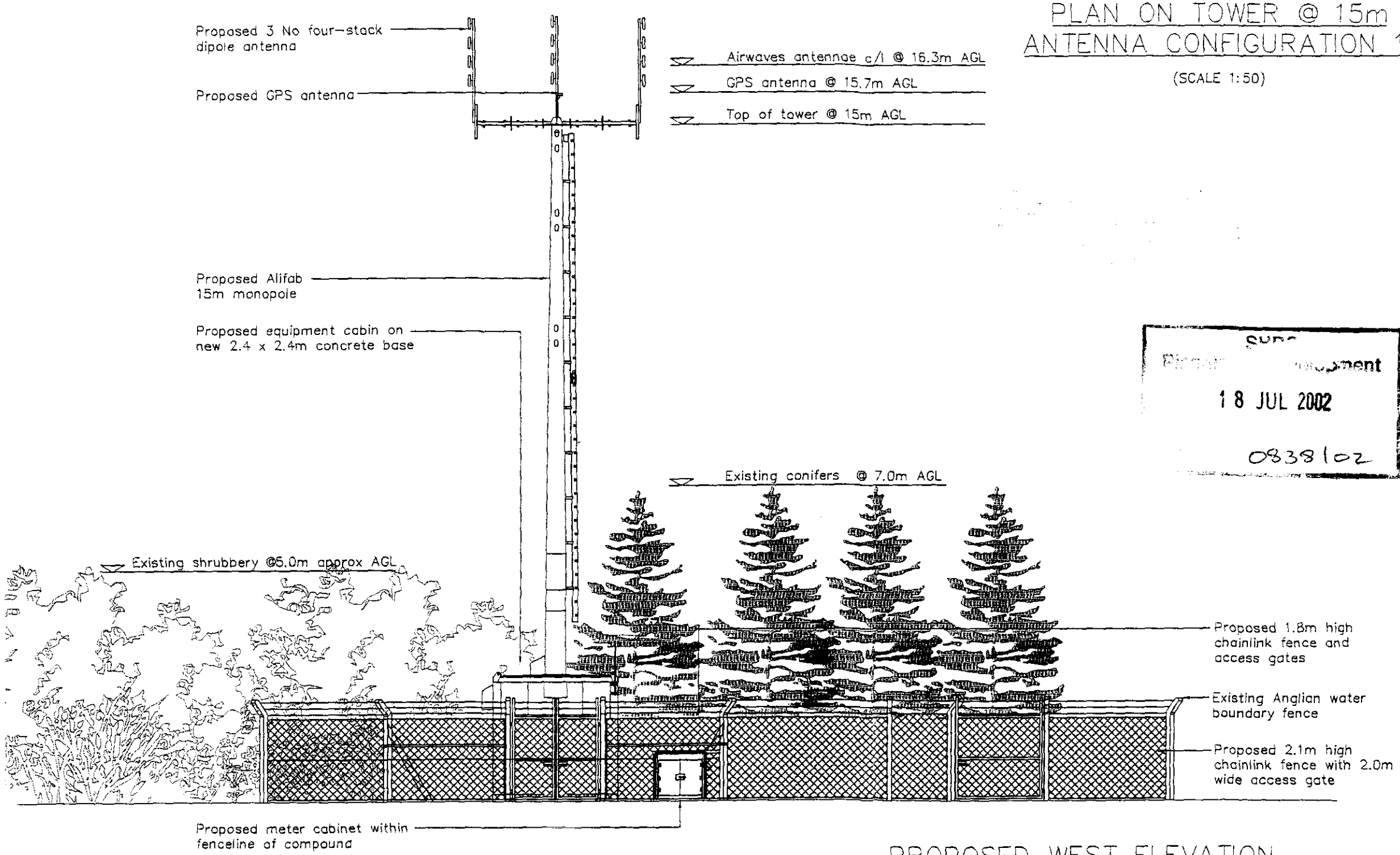

ORIGINAL SCALE AT A3 – 1:100

ALL DIMENSIONS IN MILLIMETRES

PROPOSED WEST ELEVATION

(SCALE 1:100)

SUPP... Planning Development
18 JUL 2002
0838/02

NOTE: ORIGINAL DRAWING SIZE A3

NOTES NOTES

1. Do Not Scale
2. This drawing to be read in conjunction with Galliford drawing No.s LIN028/01,02 and Standard Airwave drawings.
3. All dimensions are in mm unless otherwise noted.

Antenna Support Structure	
Type	Alifab Monopole
Height	15m
Manufacturer	Alifab

BT–PSRCP Antenna / Dish Schedule

Antenna Configuration 11

Duplexer Required Y / ~~N~~

Antenna/ Dish Ref.	Antenna Type	Size (mm)	Height ℄ AGL (m)	Antenna Bearing	Cable Type	Cable Length(m)
RX SA410	SIGMA	2600	16.3m	OMNI	LDF5–50	22
RX SA410	SIGMA	2600	16.3m	OMNI	LDF5–50	22
TX/RX SA410	SIGMA	2600	16.3m	OMNI	LDF5–50	22

Rev	Date	Amendments	Drawn By	Approved By
B	8.7.02	Anglian Water comments	SDL	CP
A	26.04.02	Issued for planning	TM	MH

Galliford

Galliford Communications
Wolvey, Hinckley
Leicestershire. LE10 3JF
Tel: 01455 222777 Fax: 01455 222758

Client

O_2

Airwave mmO₂ Ltd
5 longwalk Road
Stockley Park
East Uxbridge
Middlesex
UB11 1TT

Job Title
HOLBEACH SEWERAGE WORKS
CHERRY TREE LANE,CACKLE HILL,
HOLBEACH, SPALDING, PE12 7PX

Drawing Title
PLANNING DRAWING
PROPOSED NORTH WEST ELEVATION
SHEET 3 OF 3

Scale AS SHOWN	DO NOT SCALE THIS DRAWING	County Ref LIN028
Drawn by TM	Checked by MH	Approved by RP
Date Drawn 26.04.02	Date Checked 26.04.02	Date Approved 26.04.02

Consultant Ref	Site Code	Drawing No.	Rev.
MMD1752	GF_LIN009	03	B

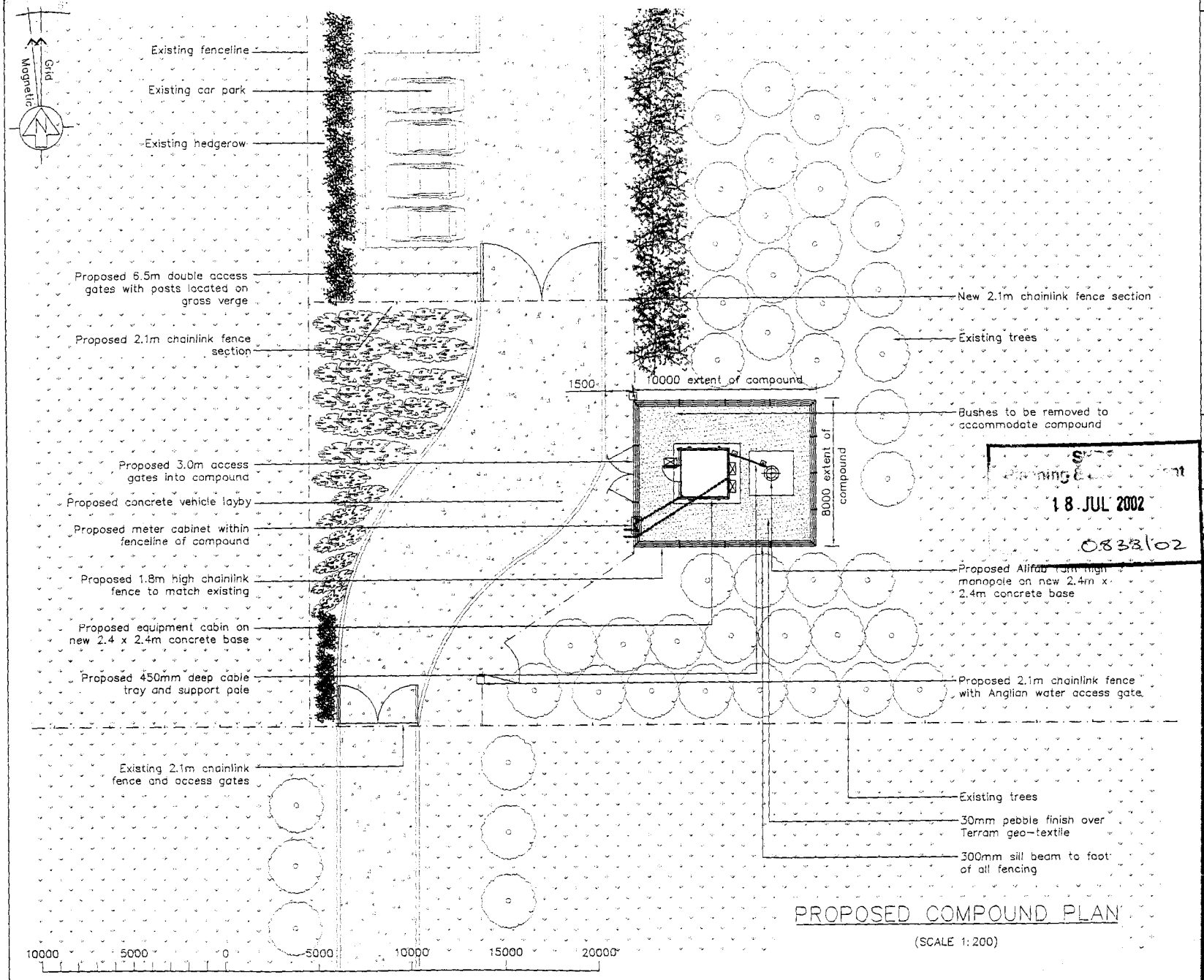

PROPOSED COMPOUND PLAN

(SCALE 1:200)

ORIGINAL SCALE AT A3 = 1:200 ALL DIMENSIONS IN MILLIMETRES

NOTE: ORIGINAL DRAWING SIZE A3

NOTES

1. Do Not Scale
2. This drawing to be read in conjunction with Galliford drawing No.s LIN028/01,03 and Standard Airwave drawings.
3. All dimensions are in mm unless otherwise noted.

BT-PSRCP Power Supply					
REC Power Supply Required			Y / N		
BT-PSRCP Cabin Schedule					
Manf.	Elliot	Colour Ref	10A05		
Type	Medium	Gland Pos. A/B/C	A		
Dimension (mm)	2744 x 2744 x 2786	Door hinge L/R	L		
Material	Galvanised steel welded construction	Pre assembled	X	Flatpack	
BT-PSRCP Meter Cabinet Schedule					
Manf.	APW	Colour Ref	10A05		
Type	Standard	Material	Galvanised steel welded construction		
Dimension (mm)	1000 x 1000 x 450				
BT-PSRCP Generator Schedule					
Autonomy	6hr	Voltage	Not required		
Type	Not required	Phase	Not required		
Location	Not required				

Rev	Date	Amendments	Drawn By	Approved By
B	8.7.02	Anglian Water Comments	SDL	CP
A	26.04.02	Issued for planning	TM	MH

Planning
18 JUL 2002
0838/02

Galliford

Galliford Communications
Wolvey, Hinckley
Leicestershire. LE10 3JF
Tel: 01455 222777 Fax: 01455 222758

Client: O2

Airwave mmO2 Ltd
5 Longwalk Road
Stockley Park
East Uxbridge
Middlesex
UB11 1FT

Job Title
HOLBEACH SEWERAGE WORKS
CHERRY TREE LANE, CACKLE HILL
HOLBEACH, SPALDING PE12 7PX

Drawing Title
PLANNING DRAWING
PROPOSED SITE LAYOUT
SHEET 2 OF 3

Scale	DO NOT SCALE THIS DRAWING	County Ref
AS SHOWN		LIN028
Drawn by: TM	Checked by: MH	Approved by: RP
Date Drawn: 28.04.02	Date Checked: 28.04.02	Date Approved: 28.04.02
Consultant Ref: MMD1752	Site Code: GF_LIN009	Drawing No.: 02
		Rev.: B

NOTE: ORIGINAL DRAWING SIZE A3

NOTES NOTES

GENERAL NOTES

Based upon ordnance survey maps with the permission of the controller of her majesty's stationary office. © Crown Copyright.

Consultant Licence No. : 100020449

O.S. Ref. : E 535585 / N 326340

Planning
18 JUL
Ref 0838/02

SITE LOCATION

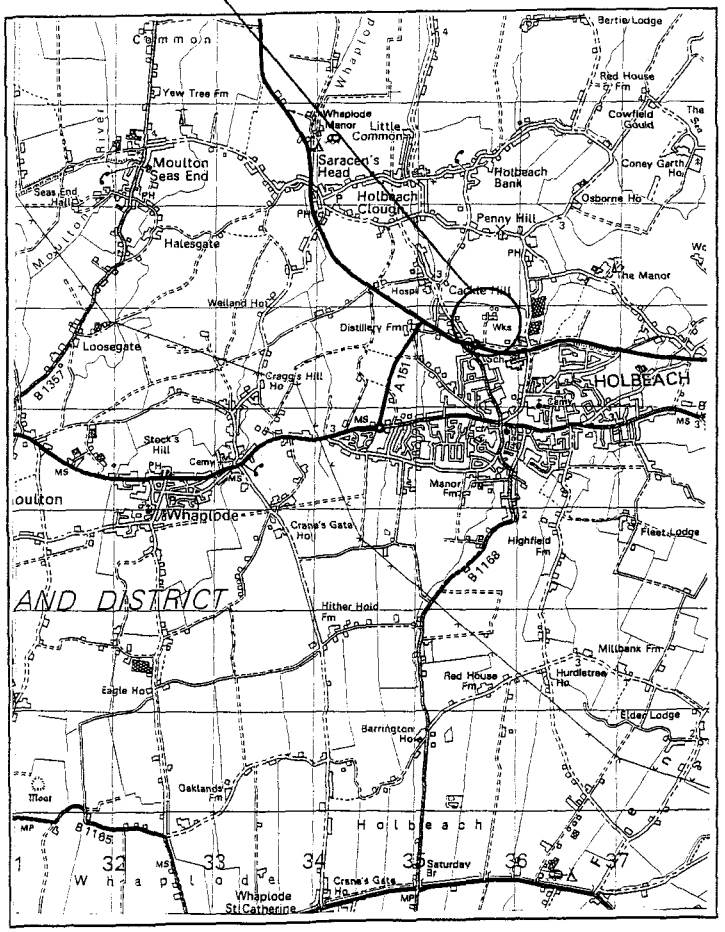

LOCATION PLAN (1:50000)

SITE LOCATION

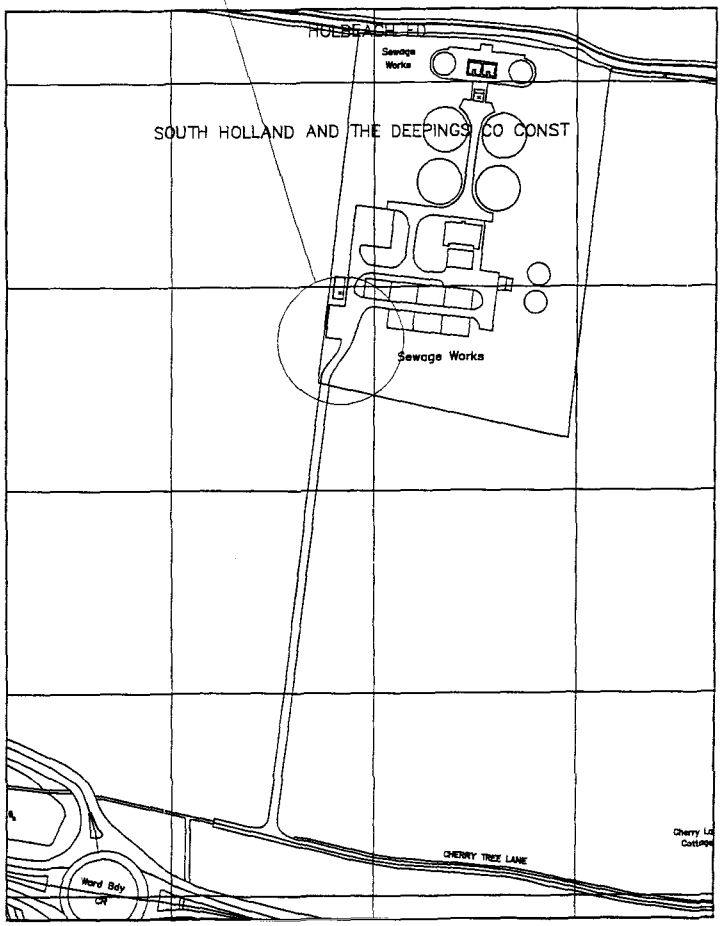

LOCATION PLAN (1:2500)

Rev	Date	Amendments	Drawn By	Approved By
A	26.04.02	Issued for planning	TM	MH

Galliford

Galliford Communications
Wolvey, Hinckley
Leicestershire. LE10 3JF
Tel: 01455 222777 Fax: 01455 222758

Client

O2

Airwave mmO2 Ltd
3 Longwalk Road
Stockley Park
East Uxbridge
Middlesex
UB11 1FT

Job Title

HOLBEACH SEWERAGE WORKS
CHERRY TREE LANE, CACKLE HILL
HOLBEACH, SPALDING. PE 12 7PX

Drawing Title

PLANNING DRAWING
PROPOSED SITE LOCATION MAPS
SHEET 1 OF 3

Scale	DO NOT SCALE THIS DRAWING	County Ref
AS SHOWN		LIN028

Drawn by	Checked by	Approved by
TM	MH	RP

Date Drawn	Date Checked	Date Approved
26.04.02	26.04.02	26.04.02

Consultant Ref	Site Code	Drawing No.	Rev.
MMD1752	GF_LIN009	01	A