END ELEVATION

DETERMINED PLAN

PROPOSED CONSERVATORY

MR & MRS D. HARRIS
82 DURSLEY LODGE
GARNSGATE RD
LONG SUTTON

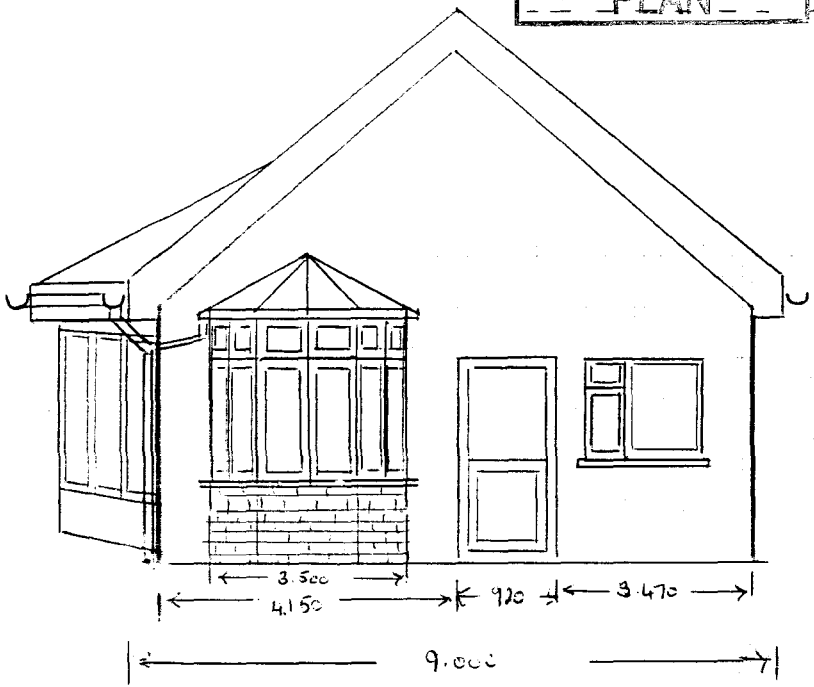

SOUTH HOLLAND
HOUSING & PLANNING
28 JAN 2000
Ref: 0055/00

DETERMINED PLAN

MAX HEIGHT 2.650.

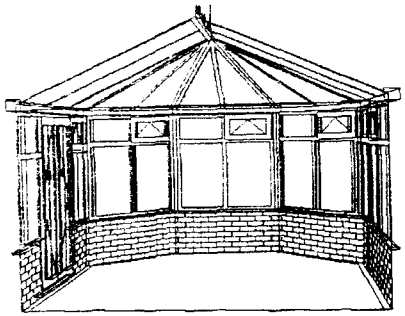

View 1

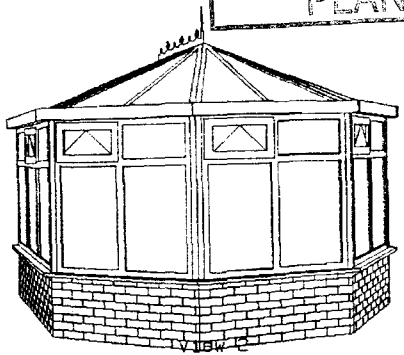

View 2

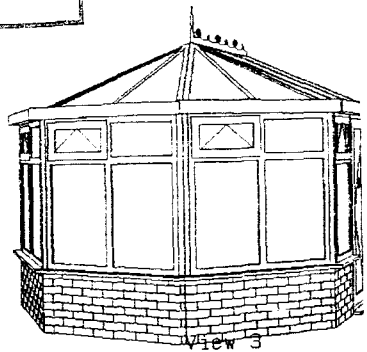

View 3

Internal Angles

1.
2.
3.
4.
5.
6.
7.
8.
9.
10.

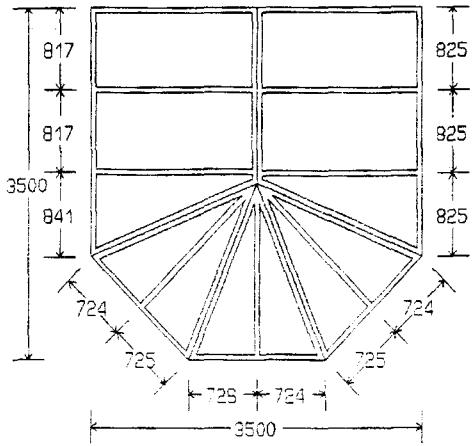

SOUTH HOLLAND DC
HOUSING & PLANNING
28 JAN 2000
Ref: 0055/00

Dim. Are Internal Frame

Bars Are From Centre To Centre

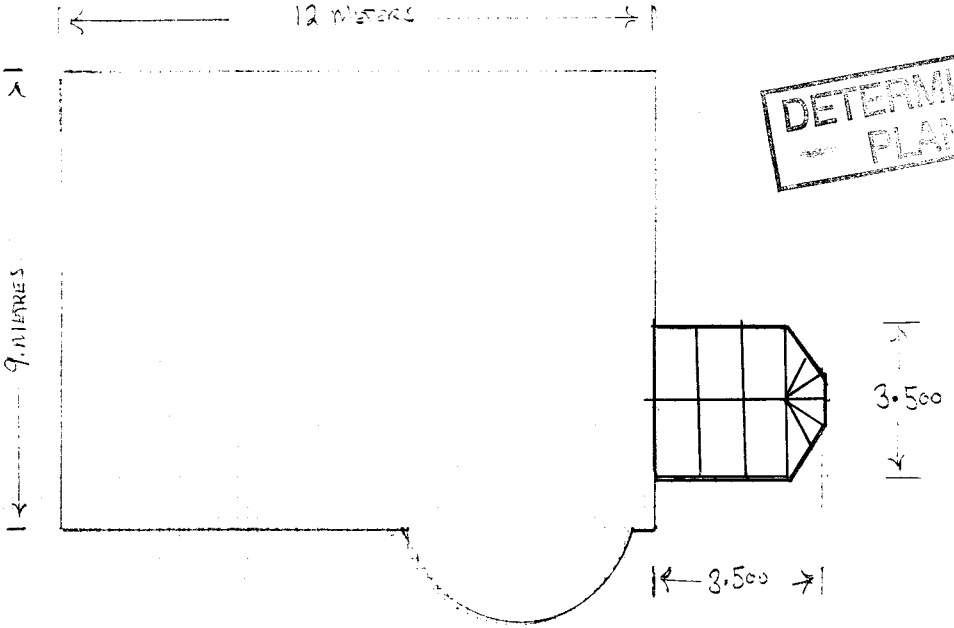

DETERMINED PLAN

PROPOSED CONSERVATORY
82 DUNDLEY LODGE
GARNGATE ROAD
LONG SUTTON.

SOUTH HOLLAND DC
HOUSING & PLANNING
28 JAN 2000
Ref: 0055/00