

RUMBLE STRIP DETAIL

(Scale 1:5)

NOTES

1. BRICKWORK TO BE 'ENGLISH GARDEN WALL' BOND.
2. FOUNDATION TO BE GRADE C25P CONCRETE TO CLAUSE 2602
3. COLD WEATHER WORKING TO CLAUSE 1709
4. BRICKS TO BE CLASS B ENGINEERING BRICKS TO B.S. 3921
5. MORTAR TO BE CLASS 1 TO CLAUSE 2404
6. COPING TO BE CAST IN SITU WITH INTEGRAL STEEL REINFORCEMENT REINFORCEMENT
7. OUTLET TO HAVE A MILD STEEL GRILLE
8. PEDESTRIAN GUARDRAIL TO BE GALVANISED MILD STEEL.

(CLAUSE NUMBERS REFER TO THE SPECIFICATION FOR HIGHWAY WORKS (H.M.S.O. 1986) AND AMENDMENTS.)

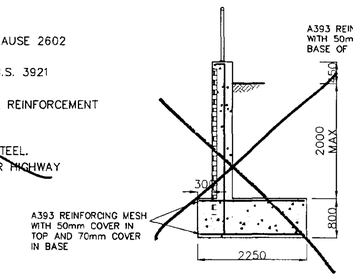

SECTION

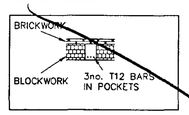

PLAN ON POCKET

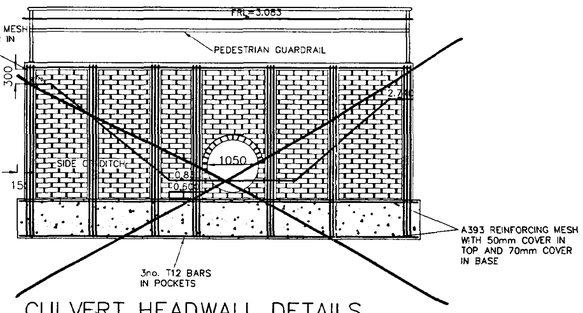

CULVERT HEADWALL DETAILS

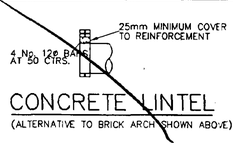

CONCRETE LINTEL

(ALTERNATIVE TO BRICK ARCH SHOWN ABOVE)

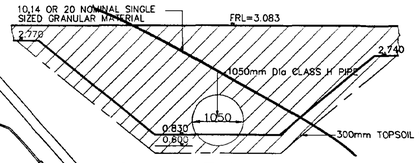

CULVERT DETAILS

denotes MARSHALLS RIALTA BLOCK PAVING IN BURNT OCRE.

GL 2.550 denotes EXISTING GROUND LEVELS

FFL 2.650 denotes FINISHED FLOOR LEVELS

denotes STORM WATER DRAINAGE

denotes FOUL WATER DRAINAGE

denotes STORM WATER MANHOLE

denotes FOUL WATER MANHOLE

denotes GULLY

PF denotes: PRIVATE FOUL INSPECTION CHAMBER
PRIVATE FOUL IS INDICATIVE ONLY AND IS TO EE DETERMINED BY OTHERS TO SUIT DEVELOPERS FEQUIREMENTS

PS denotes: PRIVATE SURFACE WATER INSPECTION CHAMBER
PRIVATE SURFACE WATER IS INDICATIVE ONLY AND IS TO EE DETERMINED BY OTHERS TO SUIT DEVELOPERS FEQUIREMENTS

© 2000 Waldeck Associates Ltd

NOTES

1. DO NOT SCALE THIS DRAWING.
2. ALL DIMENSIONS ARE IN MILLIMETRES UNLESS STATED OTHERWISE.
3. THIS DRAWING IS TO BE READ IN CONJUNCTION WITH ALL OTHER RELEVANT DRAWINGS.
4. SUGGESTED FLOOR SLAB LEVEL SHOWN IN BOX
5. ALL SEWERS TO BE CONSTRUCTED IN ACCORDANCE WITH THE PROCEDURES AND SPECIFICATIONS OF "SEWERS FOR ADOPTION" (4th EDITION MAY 1995)
6. BRANCH AND ANCILLIARY CONNECTIONS TO BE 150mm DIA LAID AT GRADIENTS BETWEEN 1:10 AND 1:80
7. GULLY CONNECTIONS TO BE 150mm DIA. LAID AT GRADIENTS OF AT LEAST 1:150 UNLESS OTHERWISE STATED
8. ALL PIPEWORK TO BE LAID WITH LEVEL SOFFITS
9. CONCRETE BEDDING SURROUND WILL BE PROVIDED TO ALL PIPEWORK WITH LESS THAN 1.2m OF COVER.
10. STREETLIGHTING TO BE PHILIPS SGS203/050T P.2 WITH 1xSON-TP50W LAMP ON 5.0m HIGH HOCKEY STICK STYLE COLUMN TO GIVE AN INCLINATION OF 5.0 DEG.

STRUCTURAL CONCRETE TO BE IN ACCORDANCE WITH BS 5328 AND TO BE NOT LESS THAN GRADE FND2 WHEN REINFORCED AND GRADE GEN3 IN ALL OTHER SITUATIONS

CAST CONCRETE SHALL BE FINISHED TO PRODUCE A "FAIR" SURFACE WHERE EXPOSED AND SHALL HAVE A "ROUGH" FINISH IN ALL OTHER AREAS (Finishes as defined in Civil Engineering Specification for the Water Industry – 4th Edition)

EXTERNAL CORNERS OF CAST CONCRETE SHALL HAVE 30mm CHAMFERS

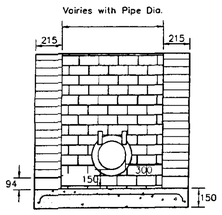

CONCRETE LINTEL PROTECTION TO PIPE

Rev.	Amendments	Rev'd By	Date
G	Pocketted Headwall details added.	JB	FEB 01
F	Connection PF6b added for plot 43	JB	FEB 01
E	Private drainage amended, as discussed with A.F. Allison Homes	JB	FEB 01
D	Site boundary amended, SHIDB 9m byelaw limit shown.	JB	FEB 01
C	Storm water outfall position modified. Storm network lifted to avoid surcharged outfall.	JB	JAN 01
B	Plan layout ammended	JB	NOV 00
A	Visibility splays added	JB	NOV 00

Client: ASHWOOD HOMES

Project: DANIEL'S GATE, LONG SUTTON

Title: DRAINAGE LAYOUT

DETERMINATION PLAN

Job No 32429

Drawing No 32429/A1/03G

Status PRELIMINARY

Scale 1:500 | Date JUN 00

Project Engineer JPB | Drawn By JB | Checked By

Waldeck Associates
Consulting Civil & Structural Engineers
Kestrevor Business Centre
2 Kestrevor Street
Sleaford,
Lincs.,
NG34 7DT
Tel. 01529 416900
Fax 01529 416944

DC
PLANNING
06 MAR 2001
Ref: H/0276/01

© 2000 Waldeck Associates Ltd

NOTES

1. DO NOT SCALE THIS DRAWING.
2. ALL DIMENSIONS ARE IN MILLIMETRES UNLESS STATED OTHERWISE.
3. THIS DRAWING IS TO BE READ IN CONJUNCTION WITH ALL OTHER RELEVANT DRAWINGS.

| | | |

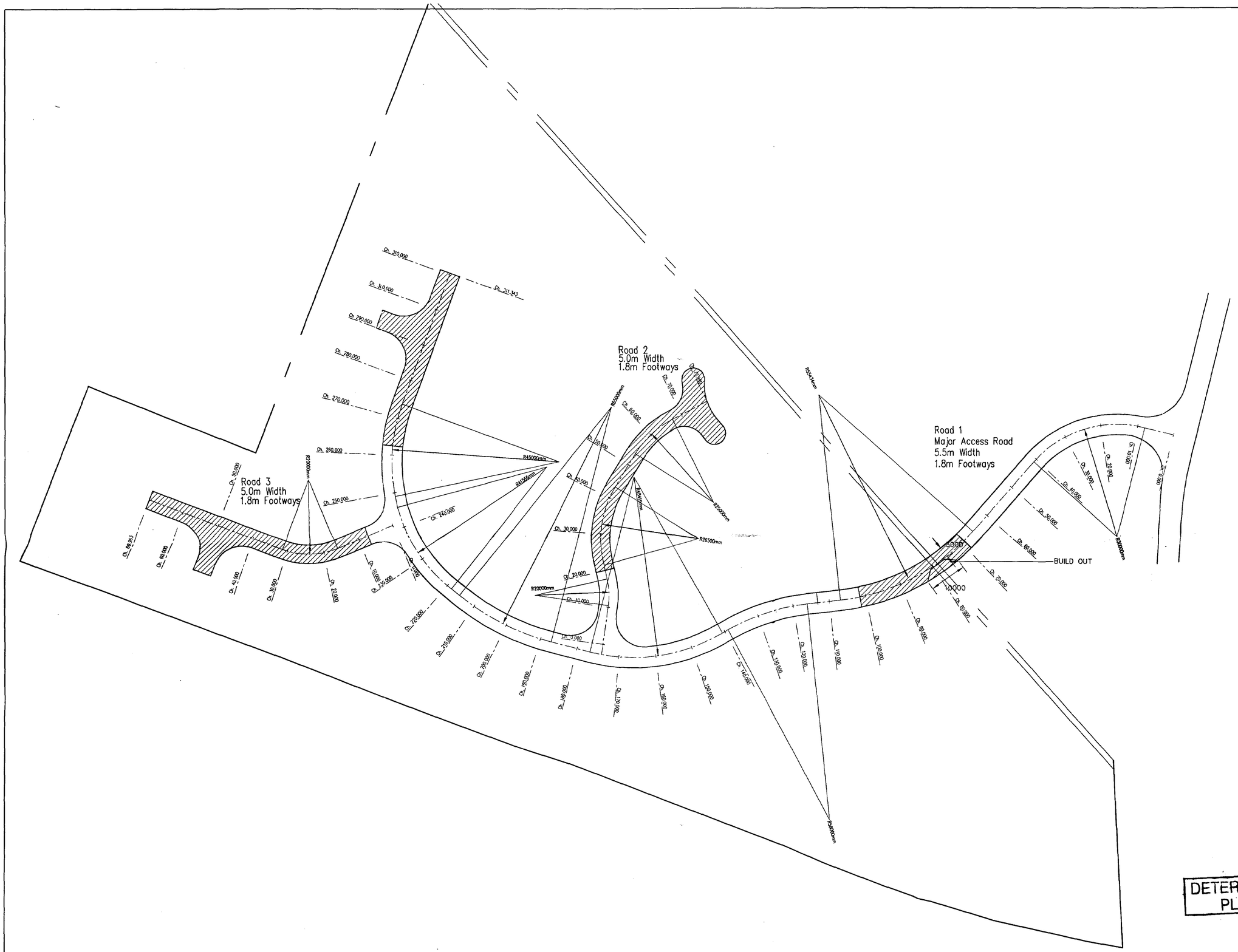

© 2000 Waldeck Associates Ltd

NOTES

1. DO NOT SCALE THIS DRAWING.
2. ALL DIMENSIONS ARE IN MILLIMETRES UNLESS STATED OTHERWISE.
3. THIS DRAWING IS TO BE READ IN CONJUNCTION WITH ALL OTHER RELEVANT DRAWINGS.

Rev.	Amendments	Rev'd By	Date
A	Road 3 adjusted, block pavers shown	JB	NOV 00

Client: ASHWOOD HOMES

Project: DANIEL'S GATE, LONG SUTTON

Title: HIGHWAY GEOMETRY

Job No: 32429

Drawing No: 32429/A1/02A

Status: PRELIMINARY

Scale: 1:500 | Date: JUN 00

Project Engineer: JPB | Drawn By: JB | Checked By:

DETERMINED PLAN

SOUTH HOLLAND DC HOUSING & PLANNING 05 MAR 2001 Ref: H11/02~~65~~76/01

Waldeck Associates
Consulting Civil & Structural Engineers
Kesteven Business Centre
2 Kesteven Street
Sleaford,
Lincs.,
NG34 7DT

© 2000 Waldeck Associates Ltd

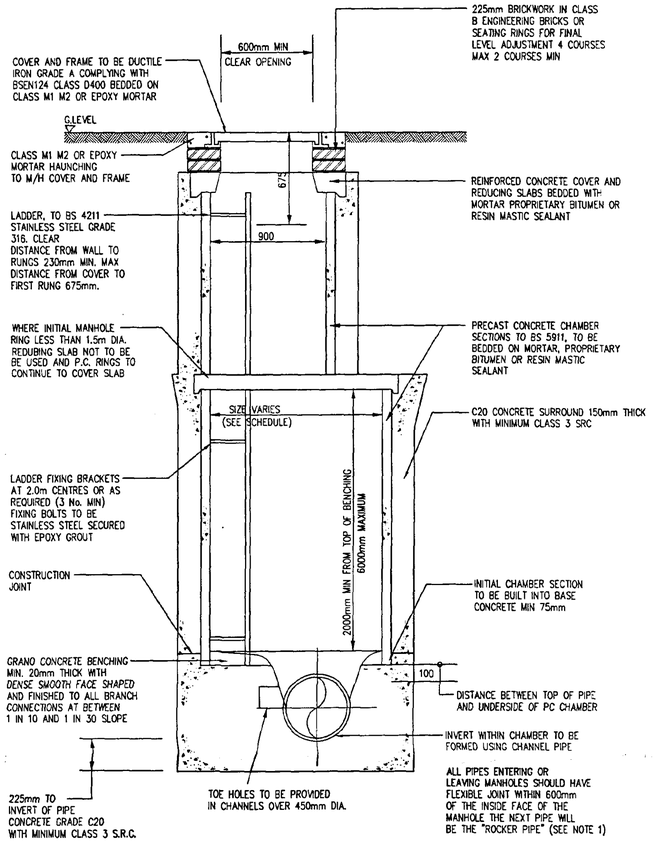

TYPE A MANHOLE TYPICAL SECTION

(MAX DEPTH FROM GROUND LEVEL TO SOFFIT OF PIPE 3.0m–6.0m)
(Scale 1:20)

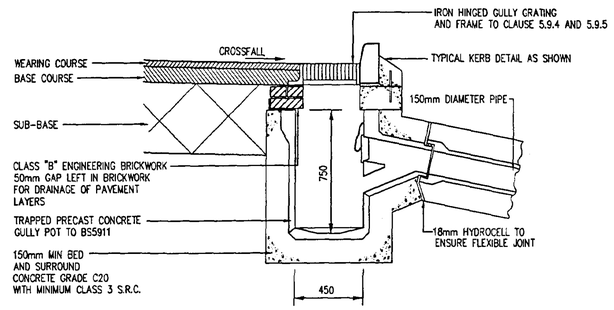

TYPICAL GULLY DETAIL

(Scale 1:20)

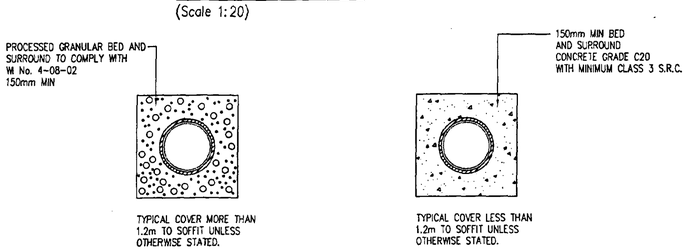

TYPICAL PIPE BED AND BACKFILL DETAIL

(Scale 1:20)

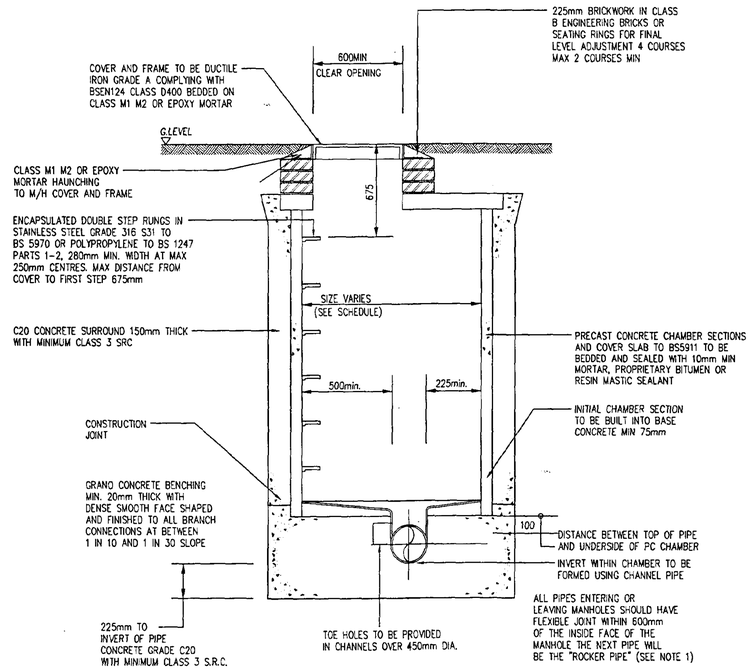

TYPE 'B' MANHOLE TYPICAL SECTION

(MAX DEPTH FROM GROUND LEVEL TO SOFFIT OF PIPE 3.0m, MINIMUM DEPTH FROM TOP OF BENCHING TO UNDERSIDE OF BISCUIT 900mm)
(Scale 1:20)

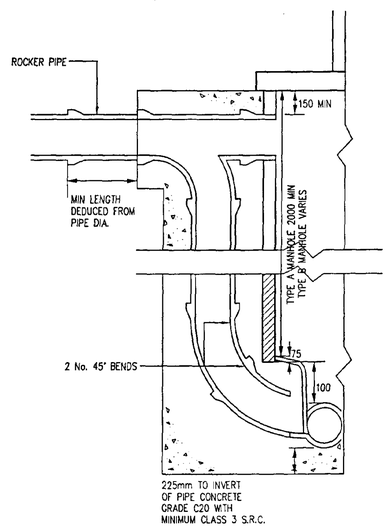

BACKDROP DETAIL

(Scale 1:20)

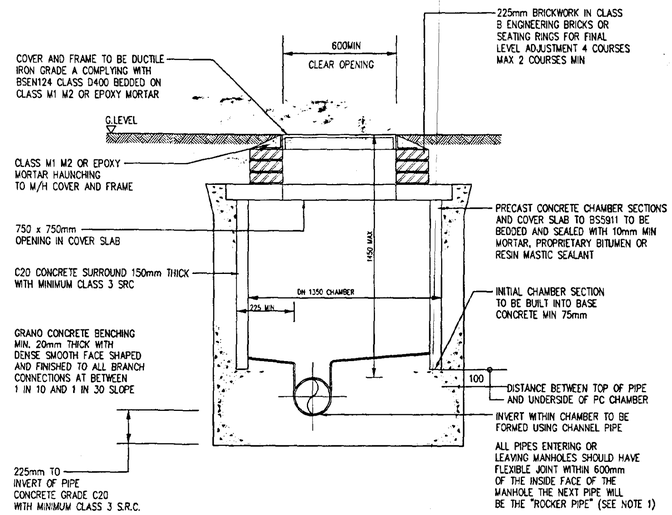

TYPE 'X' MANHOLE TYPICAL SECTION

(MAX DEPTH FROM GROUND LEVEL TO SOFFIT OF PIPE 1.45m)
MANHOLE TO BE 1350mm DIAMETER
(Scale 1:20)

MANHOLE CHAMBER SIZES	
DIA. LARGEST PIPE IN MANHOLE	CHAMBER SECTION DIA. REQUIRED
< 375	1200
375 – 450	1350
500 – 700	1500
750 – 900	1800

THE SIZES STATED ABOVE ARE THE MINIMUM ACCEPTABLE, WHERE TWO OR MORE PIPES ENTER THE MANHOLE THE CHAMBER SIZE MUST BE SUFFICIENT TO ACCOMODATE THE REQUIRED BENCHING SHOWN.

SEWER NOTES:

1. ROCKER PIPE DETAILS

SEWER DIA. (mm)	EFFECTIVE LENGTH (mm)
150 TO 600	600
675 TO 750	1000
825 AND OVER	1250

2. ALL JOINTS BETWEEN PRECAST CONCRETE MANHOLE COMPONENTS SHALL HAVE A MINIMUM UNCOMPRESSED THICKNESS OF 10mm OF PROPRIETARY BITUMEN OR RESIN MASTIC SEALANT
3. CHAMBERS AND MANHOLES WITH OUTGOING PIPES OF GREATER THAN 600mm DIA. SHALL BE FITTED WITH REMOVABLE STAINLESS STEEL (GRADE 316) SAFETY CHAINS OR POLYPROPYLENE ROPE
4. MANHOLES GREATER THAN 6m IN DEPTH SHALL BE SUBJECT TO SPECIFIC DESIGN
5. ALL MANHOLE COVERS ARE TO BE MARKED "FW" OR "SW" AS APPROPRIATE AND SHALL CARRYTHE "AW" LOGO
6. ALL SEWERS ARE TO BE CONSTRUCTED IN ACCORDANCE WITH THE PROCEDURES AND SPECIFICATONS CONTAINED IN "SEWERS FOR ADOPTION" (4th Edition May 1995)
7. STORM AND FOUL BRANCH CONNECTIONS ARE TO BE LAID AT GRADIENTS OF BETWEEN 1:10 AND 1:80 AND SHALL BE 150mm IN DIAMETER UNLESS OTHERWISE SPECIFIED
8. GULLY CONNECTIONS TO BE LAID AT GRADIENTS OF AT LEAST 1:150 AND SHALL BE 150mm IN DIAMETER UNLESS OTHERWISE SPECIFIED
9. ALL IN-SITU CONCRETE SHALL BE MINIMUM GRADE C20 AND SHALL CONTAIN A MINIMUM CLASS 3 SRC (GEN 3 TO BS5328)
10. PRECAST CONCRETE COVER AND REDUCING SLABS TO BE HEAVY DUTY REINFORCED CONCRETE TO BS 5911
11. BACKDROPS ARE ONLY TO BE USED WHERE GRADIENTS STEEPER THAN THE MAX PERMISSIBLE ARE UNAVOIDABLE. THE BACKDROP RODDING EYE IS NOT PERMITTED IN THE UPPER ACCESS SHAFT OF TYPE A MANHOLES
12. PIPES UPTO 225mm DIA TO BE CLAY IN ACCORDANCE WITH BS EN 295 AND BS 65
PIPES 300mm DIA AND ABOVE TO BE CONCRETE IN ACCORDANCE WITH BS 5911 : PART 100
RISING MAINS SHALL BE BLACK MDPE SDR11 AS W 4-32-03 AND JOINTS AND FITTINGS TO BE IN ACCORDANCE WITH W 4-32-04.
OTHER APPROVED PIPE MATERIALS TO BE IN ACCORDANCE WITH THEIR RELEVANT BS.

NOTES

1. DO NOT SCALE THIS DRAWING.
2. ALL DIMENSIONS ARE IN MILLIMETRES UNLESS STATED OTHERWISE.
3. THIS DRAWING IS TO BE READ IN CONJUNCTION WITH ALL OTHER RELEVANT DRAWINGS.

Rev.	Amendments	Rev'd By	Date
E	Various minor amendments	JB	Dec 00
D	Note 7. ammended	JB	Oct 00
C	Various minor amendments	JB	Jul 00
B	Various minor amendments	JB	Jun 00
A	Various minor amendments	JPB	May 00

Client: STANDARD DETAILS

Project: DRAINAGE DETAILS

Title: PROPOSED MANHOLE AND TYPICAL GULLY DETAILS

DETERMINED PLAN 03 MAR 2001 Ref: H11028501

Job No	
Drawing No	STND/SEW/01E
Status	STANDARD DETAILS
Scale	SHOWN
Date	MAY 00
Project Engineer	PW
Drawn By	JPB
Checked By	

Waldeck Associates
Consulting Civil & Structural Engineers
Lindum House, Northgate, Sleaford, Lincs. NG34 7BX
Tel 01529 415909
Fax 01529 414844
E-mail Waldeck@compuserve.co.uk

FLEXIBLE CONSTRUCTION

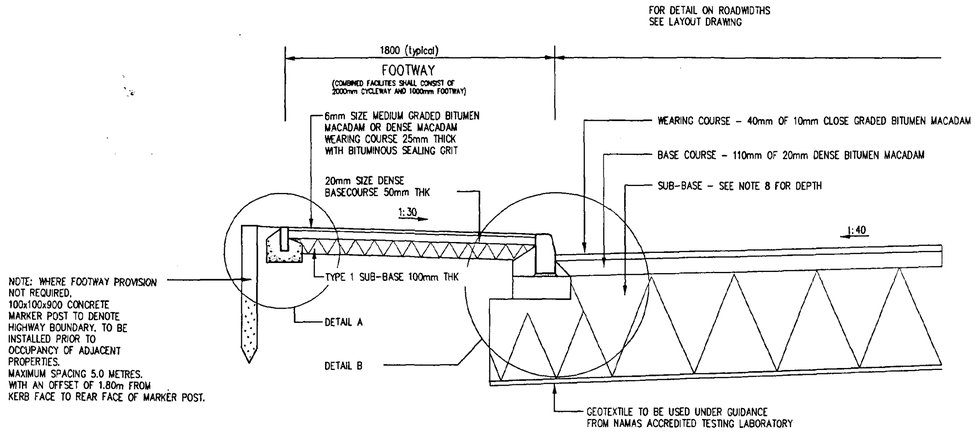

TYPICAL SECTION FLEXIBLE CONSTRUCTION
(Scale 1:20)

SMALL BLOCK PAVERS

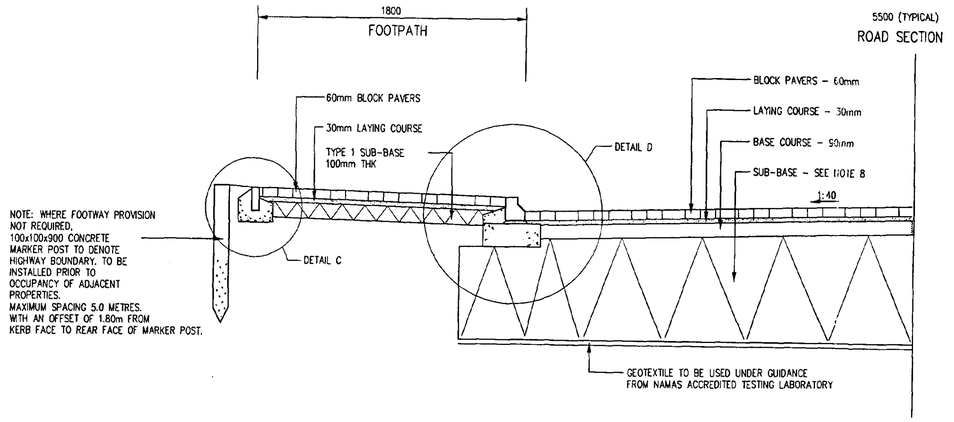

TYPICAL SECTION THROUGH BLOCK PAVED ROAD
(Scale 1:20)

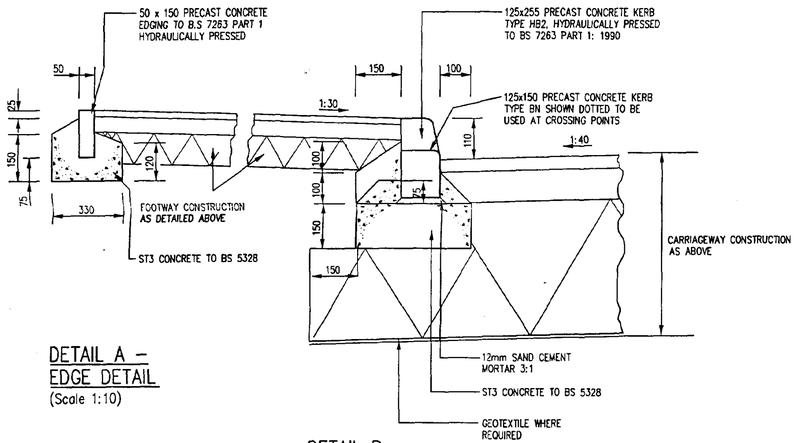

DETAIL A - EDGE DETAIL
(Scale 1:10)

DETAIL B KERB EDGE DETAIL
(Scale 1:10)

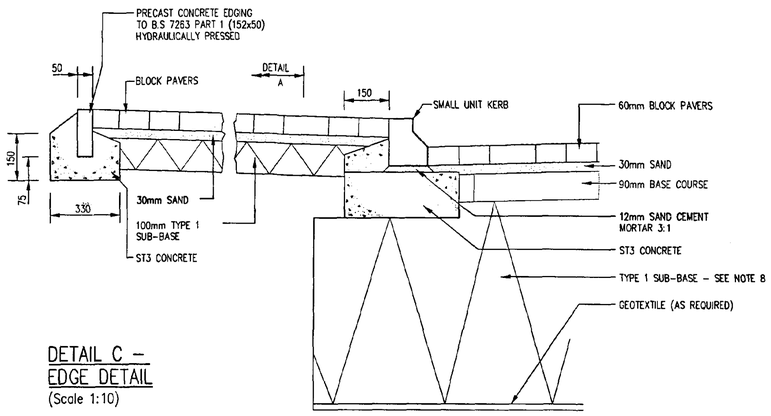

DETAIL C - EDGE DETAIL
(Scale 1:10)

DETAIL D KERB EDGE DETAIL
(Scale 1:10)

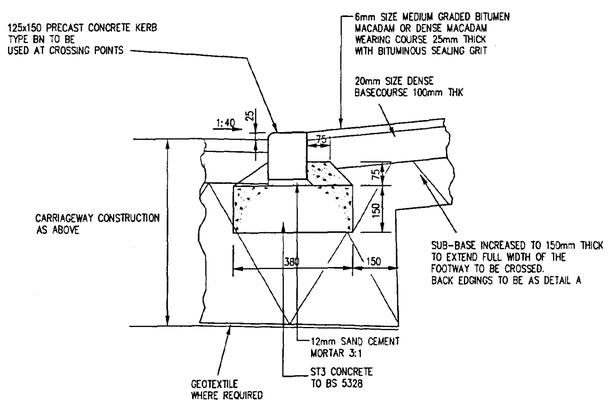

TYPICAL VEHICULAR CROSSING DETAIL
(Scale 1:10)

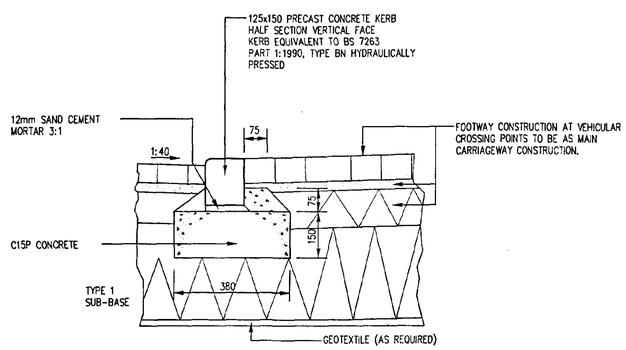

TYPICAL DROP KERB DETAIL
(Scale 1:10)

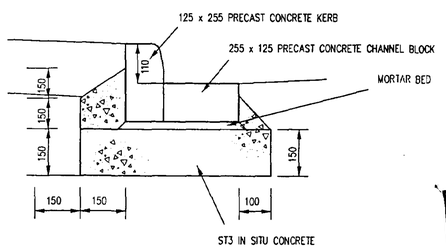

CHANNEL BLOCK DETAIL
(Scale 1:10)

DETERMINED PLAN

SOUTH HOLLAND HOUSE PLANNING
05 MAR 2001
Ref: H11/0276/01

© 2000 Waldeck Associates Ltd

NOTES

1. DO NOT SCALE THIS DRAWING.
2. ALL DIMENSIONS ARE IN MILLIMETRES UNLESS STATED OTHERWISE.
3. THIS DRAWING IS TO BE READ IN CONJUNCTION WITH ALL OTHER RELEVANT DRAWINGS.
4. NAMAS ACCREDITED LABORATORY CBR TESTS ARE TO BE UNDERTAKEN AND ENGINEER TO BE INFORMED OF RESULTS.
5. BULKFILLING BENEATH ROADS UP TO SUB-BASE LEVEL TO INFILL VOIDS OR SOFT SPOTS TO BE TYPE 6F2 GRANULAR MATERIAL COMPACTED IN LAYERS TO CLAUSE 6.8
6. ALL WORKS TO BE IN ACCORDANCE WITH LINCOLNSHIRE COUNTY COUNCIL HIGHWAYS AND PLANNING "DEVELOPMENT ROAD SPECIFICATION AND CONSTRUCTION 1999"
7. NO ON SITE WORKS SHALL COMMENCE UNTIL A SITE INVESTIGATION REPORT TO BE CARRIED OUT BY A UKAS ACCREDITED COMPANY FROM LINCOLNSHIRE COUNTY COUNCIL APPROVED LIST. HAS BEEN SUBMITTED AND APPROVED BY L.C.C.
8. SUB-BASE THICKNESSES

   CBR < 1½% USE TESTING LABORATORY DESIGN
   CBR 1½% 630mm CONSISTING 330mm GRANULAR FILL TO CLAUSE 6.8 AND 300mm TYPE 1 SUB-BASE
   CBR 2% 400mm TYPE 1 SUB-BASE
   CBR 3% 310mm TYPE 1 SUB-BASE
   CBR 4% OR GREATER, 300mm TYPE 1 SUB-BASE

   NOTE: WHERE SUB-GRADE NON FROST SUSCEPTIBLE SUB-BASE DEPTHS CAN BE REDUCED AS FOLLOWS
   CBR 4% 280mm OF TYPE 1
   CBR 5% 225mm OF TYPE 1
   CBR 6-15% 200mm OF TYPE 1
   CBR > 15% 150mm OF TYPE 1
9. TACTILE CROSSINGS FOR PEDESTRIANS AS CLAUSE 1.8 SHALL BE PROVIDED AT ALL ROAD JUNCTIONS SERVED BY FOOTWAYS AND WILL HAVE A MIN 2 No. DROPPED KERBS
   FINAL LOCATIONS TO BE AGREED WITH LCC REP.
10. VEHICLE CROSSINGS SHALL BE PROVIDED FOR ALL DRIVEWAY ENTRANCES IN ACCORDANCE WITH CLAUSE 1.6
11. WHERE CARRIAGEWAY LONGITUDINAL FALLS ARE LESS THAN 1:150 CHANNEL BLOCKS ARE REQUIRED ADJACENT TO KERBING AND WHERE FALLS ARE LESS THAN 1:250, THE CHANNEL BLOCKS SHOULD BE LAID TO FALSE FALLS
12. SMALL BLOCK PAVERS SHALL BE MADE IN CLAY TO BS 6677 PART 1 OR CONCRETE TO BS 6717 PART 1 AND SHALL BE RECTANGULAR TYPE PB CHAMFERED
13. PRECAST CONCRETE PAVING BLOCKS SHALL BE LAID ON 30mm BEDDING LAYER IN ACCORDANCE WITH BS 7533 PART 3 OR IN ACCORDANCE WITH CLAUSE 10.4 OR 1.6(C) AS INDICATED
14. CYCLEWAY CONSTRUCTION TO BE AGREED WITH LCC SIGNS AND MARKINGS TO BE SUPPLIED AT THE REQUEST OF THE HIGHWAYS MANAGER

Rev.	Amendments	Rev'd By	Date
E	Reference to note 7 ommended to note 8.	JB	Oct 00
D	Minor ammendments	JB	Jul 00
C	Minor ammendments	JB	Jul 00
B	Notes ammended	JB	Jun 00
A	Addition of block paving details	JPB	May 00

Client: STANDARD DETAILS

Project: CARRIAGEWAY DETAILS

Title: STANDARD DETAILS LCC ROADS UPTO 0.25 MSA

Job No:

Drawing No: STND/LCC/01E

Status: STANDARD DETAILS

Scale: 1:20 | Date: MAY 00

Project Engineer: PW | Drawn By: JPB | Checked By:

Waldeck Associates
Consulting Civil & Structural Engineers
Lindum House, Northgate, Sleaford, Lincs., NG34 7BX
Tel. 01529 415009
Fax. 01529 414844