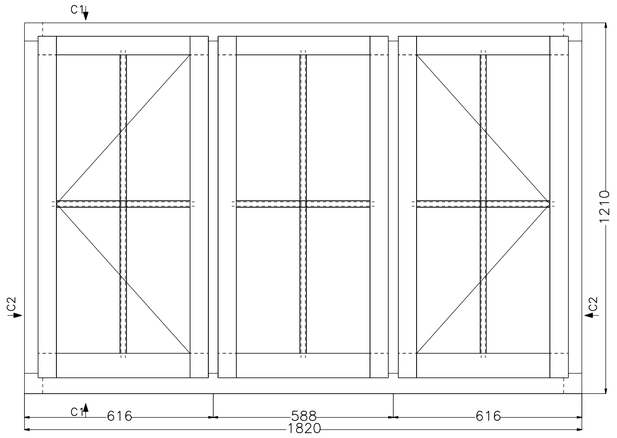
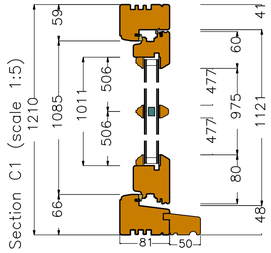
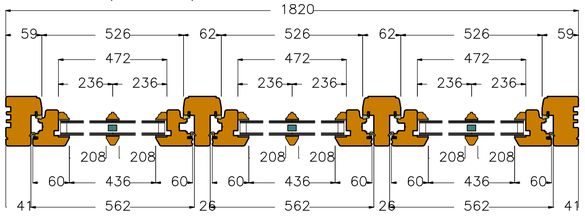
TYPICAL WINDOWS

View from outside (scale 1:10)





Section C2 (scale 1:5)



Comments

Customer: Simon Barker
Carpentry & Joinery -
Turpins Pub
Job No.: OR102322
Ref: W1/1 & W1/2

F/Sashes	
F/Ironmo	
Glaze	
P/O/B	

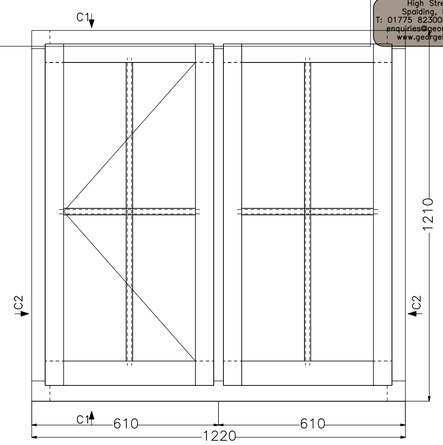
Revisions

Project - OR102322	
Drawing No	1
Scale	As shown on A3
Drawn by	Rob Hudson
Date	~~06.01.2015~~
Rev.	00

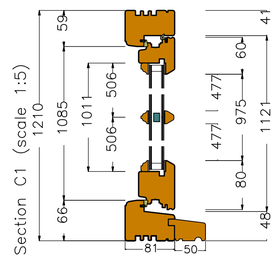
GEORGE BARNSDALE
ESTABLISHED 1884

High Street, Donington,
Spalding, Lincs, PE11 4TA.
T: 01775 823000 F: 01775 823010
enquiries@georgebarnsdale.co.uk
www.georgebarnsdale.co.uk

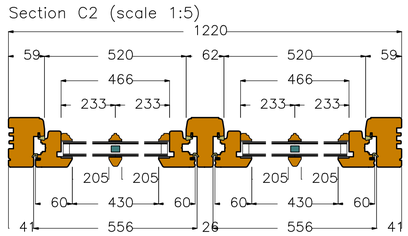
View from outside (scale 1:10)



TYPICAL WINDOWS



Section C2 (scale 1:5)



Comments

Customer: Simon Barker
Carpentry & Joinery -
Turpins Pub
Job No.: OR102322
Ref: W2

F/Sashes	
F/Ironmo	
Glaze	
P/O/B	

Revisions

Project - OR102322	
Drawing No	2
Scale	As shown on A3
Drawn by	Rob Hudson
Date	06.01.2015
Rev.	00

GEORGE BARNSDALE
ESTABLISHED 1884

High Street, Donington,
Spalding, Lincs, PE11 4TA.
T: 01775 823000 F: 01775 823010
enquiries@georgebarnsdale.co.uk
www.georgebarnsdale.co.uk

PROPOSED EXTENSION AND ALTERATIONS TO TURPINS WINE BAR MARKET PLACE LONG SUTTON FOR STP PROPERTIES

DO NOT SCALE FROM THIS DRAWING

This drawing is copyright and may not be reproduced except with our prior consent. Check all dimensions on site before commencing any work or preparing any shop drawings. Any discrepancies must be reported immediately. Figured dimensions are to be taken in preference to scaled dimensions. This drawing is to be read in conjunction with all relevant consultants' and specialists' drawings and any other written instructions issued during the course of the contract. Any variations from the contract documents must be approved in writing before proceeding with the work. Materials and workmanship must comply with the relevant current British Standard Specifications, Codes of Practice and Agrément Certificates. All goods and materials must be used and applied strictly in accordance with the manufacturer's instructions. Any proposed departure from the contract documents is to be submitted to the Architect for approval. All dimensions must be checked on site and any discrepancy between the drawings and the actual conditions encountered must be reported to the Architect before proceeding with the work. Where a Building Regulations application is required, it is the responsibility of the contractor to ensure that all the necessary approvals are obtained. Any proposed departure from the approved documents must be submitted to the Building Control Surveyor for approval before proceeding with the work. Where a Building Notice