SOUTH HOLLAND DISTRICT COUNCIL

FILE COPY

Town and Country Planning Act 1990

Planning Permission

Reference: H11/0966/92 Received:10-SEP-92 Type:FULL

Name: Mr & Mrs J C Issott
29 Lancaster Drive
Long Sutton
Spalding
Lincs

Agent: G R Merchant
4 Chapel Gardens
Whaplode
Spalding
Lincs

Description: Conservatory

Location : 29 Lancaster Drive Long Sutton
Spalding

South Holland District Council hereby give notice that PERMISSION HAS BEEN GRANTED for the development in accordance with the application and plans submitted, subject to any condition(s) set out below:

1 The development must be begun not later than the expiration of five years beginning with the date of this permission.

Reason: As required by Section 91 of the Town and Country Planning Act 1990.

Director of Planning and Building Control Services
20-OCT-92 H11/0966/92

This decision refers only to that required for the purposes of the Town and Country Planning Act and not for Building Regulations or any other legislation. See enclosed notes relating to rights of appeal.

BRIAN SMITH Dip TP MRTPI Director of Planning & Building Control Services

Planning & Building Control Department, Council Offices, Priory Road, Spalding, Lincolnshire. PE11 2XE (Tel: 0775 761161)

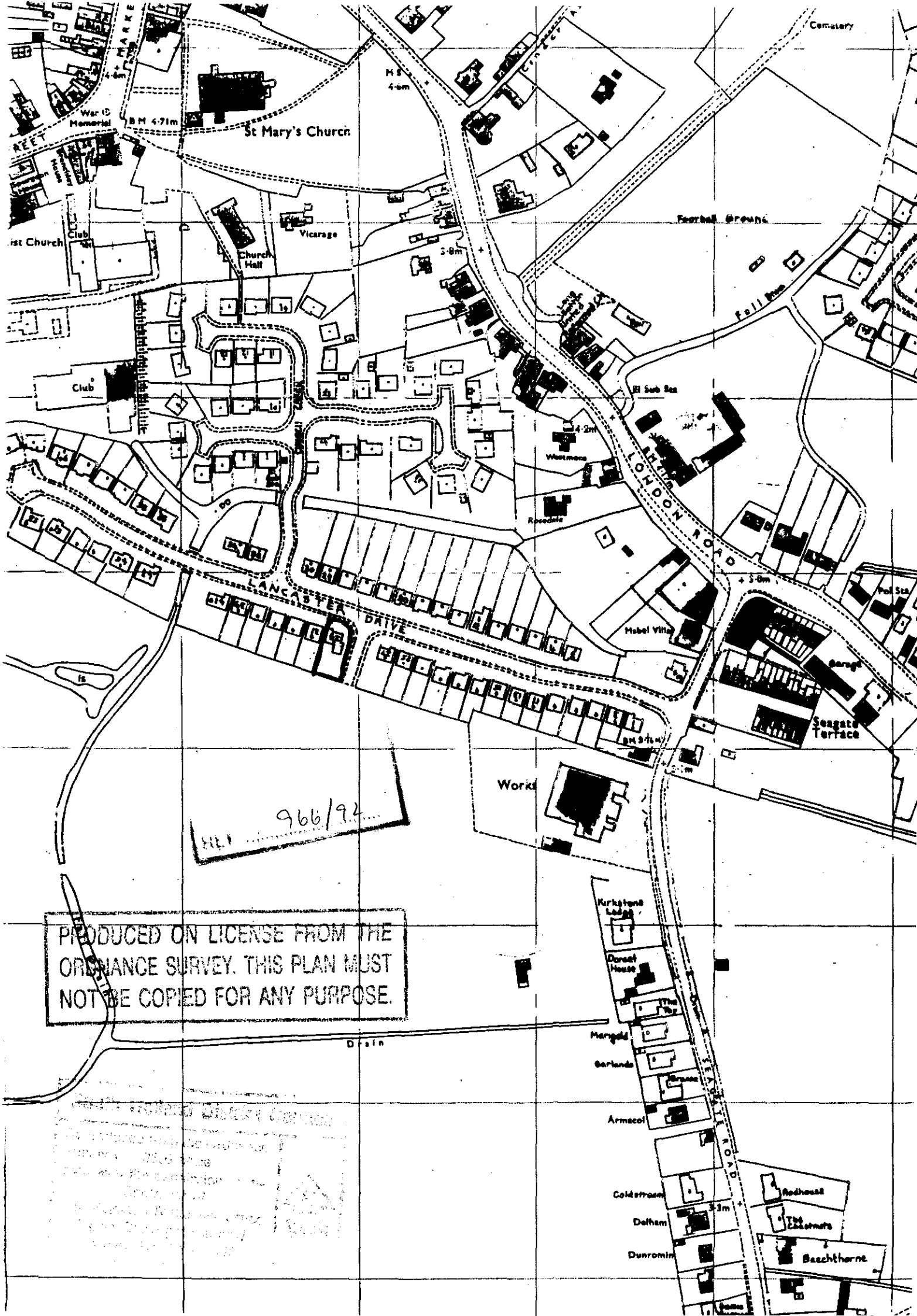
St Mary's Church
Vicarage
Church Hall
Club
Cemetery
Football Ground
LONDON ROAD
LANCASTER DRIVE
Westmere
Rosedale
Mabel Villa
Seagate Terrace
Works
Kirkstone Lodge
Dorset House
Marigold
Garlands
Armacol
Coldstream
Delham
Dunromin
Redhouse
Baschtherne
Drain
966/94
PRODUCED ON LICENSE FROM THE ORDNANCE SURVEY. THIS PLAN MUST NOT BE COPIED FOR ANY PURPOSE.

FOUR COPIES REQUIRED

PLANNING APPLICATION

For office use only

Application No. H11/0966/92

Date Registered 10 SEP 1992

1. Please complete in block letters

NAME AND ADDRESS OF APPLICANT

MR & MRS. J.C. ISBOTT.
29 LANCASTER DRIVE.
LONG SUTTON.
SPALDING.
LINCS.

Tel. No.

NAME AND ADDRESS OF AGENT
(if form completed by agent)

G. R. MERCHANT.
4 CHAPEL GARDENS.
WHAPLODE.
SPALDING.
LINCS.

Tel. No. Hol 378853.
(Personal contact name)

OFFICE COPY

Please complete in block letters

FULL POSTAL ADDRESS OF THE APPLICATION SITE

29 LANCASTER DRIVE. LONG SUTTON.

Please complete in block letters

DESCRIPTION OF PROPOSED DEVELOPMENT

CONSERVATORY.

Please complete

Signed... G. R. Merchant. Date... 7.9.92

I attach
* Four copies of all plans
*an ownership certificate (see back page)
*a fee of £55. If you consider no fee is payable include a written explanation instead.

Previous application No:

Please tick **one** box and answer the extra questions under that section.

2. **TYPE OF APPLICATION**

(✓)

This is a **full** application for change of use and/or new building works [✓] → **Now complete Parts 3, 4 and 5 and an Ownership Certificate**

or This is an **outline** application [ ]

Please state Site Area (Hectares)

Please tick **any** box where you are including details which you wish to be considered as part of this application.

Siting [ ] Design [ ] External Appearance [ ]

Means of Access [ ] Landscaping [ ]

Now complete Parts 3 and 5 and an Ownership Certificate.

or This is a **reserved matters** application. [ ]

A. Please state Reference Number of outline permission.
B. Please state which reserved matters are dealt with in this application.

Now complete Part 4 only

or This is an application for **renewal** of temporary permission or **continuation** without complying with planning condition. [ ]

A. Please state Reference Number of previous permission
B. Please state Condition Number referred to

Now complete an Ownership Certificate

or This is an application for **modification** of a condition on a planning permission which has not yet been implemented. [ ]

A. Please state Reference Number of previous permission
B. Please state Condition Number referred to
C. Please state variation required

Now complete an Ownership Certificate

TYPE OF DEVELOPMENT

3. A. Please state whether the proposal involves:- (Tick one or more boxes)

(i) New building(s)	
(ii) Alterations or extension	✓
(iii) Change of use	

B. If new dwellings are proposed, please state how many: N/A.

4. A. If building works are proposed, other than residential, please state extra floorspace to be created:	N/A. sq. metres
B. Please state size of any new structure:- (a) max. height:	3.132 metres
(b) max. length:	2687 metres
(c) max. width:	3.852 metres
C. Please state type and colour of materials for facing external walls:	uPVC EXTRUSIONS & FACING BRICKS TO MATCH EXISTING
D. Please state type and colour of roofing materials.	
E. Has a survey of the site been undertaken? State Yes or No	YES.

5. GENERAL INFORMATION Please complete each section

EXISTING USES
Please state existing or, if vacant, the last use(s) of site. — HOUSE & GARAGE.

ACCESS TO ROADS (VEHICULAR AND PEDESTRIAN) Please tick **one** box

A. There will be **no** new access to a public road and **no** alteration to any existing access to a public road — ✓

or

B. There will be a new or altered access to a public road → If so, name of road: Will there be — Individual access(es) / New estate road

C. What provision will be made for garages or parking within the site? — N/A.

TREES Please tick **one** box

A. The proposal does **not** involve the felling of any trees — ✓

B. The proposal does involve the felling of one of more trees → If so, please show details on plans

DRAINAGE Please complete

A. Please state how surface water will be disposed of — SOAKAWAY.

B. For estate developments, please state how highway surface water will be disposed of — N/A.

C. Please state whether a land drain will be affected — NO.

D. Foul sewerage will be disposed of to:

Mains sewer [ ] Cesspool [ ] Septic tank [ ] N/A.

OTHER MATTERS Please complete

	State Yes or No	
The proposal is in connection with agriculture	NO	→ If so, **please give details in Part 6**
The proposal affects a listed building	NO	
The proposal affects a public footpath	NO	
The proposal is known to affect contaminated or filled land	NO	
The proposal is for industrial, warehousing, offices or shopping purposes	NO	→ If so, **please complete Part 7**
In cases where a statutory consultation will be required, please state whether you have sent a copy of the application to the consultee yourself. If yes, please give date sent.	NO.	→ Date: Consultee(s):
Is this application related to a previous submission		→ Application No.:

6. ANY OTHER INFORMATION Please add any details you wish in support of your application.

Continue on separate sheet if necessary.

OWNERSHIP CERTIFICATES

PLEASE COMPLETE ALL THRE SECTIONS.

Use the notice at the bottom of the page only when necessary.

1. **APPLICANT'S INTEREST** Please state interest in site (e.g. owner, prosp. purchaser) (Please remember to indicate on the location plan any other land under your control).	OWNERS.

2. OWNERSHIP OF THE SITE

This certificate is to make sure that the owners of land are aware of applications made on it.

If the applicant is the **sole owner of the whole site**, complete **Certificate A.**
In **any other case** (i.e. if the applicant is a prospective purchaser, or a tenant, or a joint owner, or the sole owner of only part of the site) then you must give notice to all other owners, and complete **Certificate B.** You can use the notice at the bottom of the form to send to the owner. (An "owner" is a person having a freehold interest, or having a leasehold interest where seven years or more remains unexpired). If you are unable to trace the owner, please contact the Planning Office as a different certificate will be required.

Certificate A

Nobody except the applicant was an owner of any part of the land to which the application relates at the beginning of the period of 21 days ending with the date of the accompanying application.

Signed J.K. Merchant (~~Applicant~~/Agent) Date 7.9.92.

Certificate B

The applicant has given the required notice to everyone else who were owners of any part of the land to which the application relates at the beginning of the period of 21 days ending with the date of the accompanying application.

State Name and address of owner: State Date notice served:

Signed ..... (Applicant/Agent) Date .....

3. AGRICULTURAL HOLDINGS CERTIFICATE

If the land is not in agricultural use, complete Certificate 1.
If the land is agricultural, but there is no agricultural tenant, complete Certificate 1.
If the site does relate to an agricultural holding, you must give notice to any tenant, and complete Certificate 2. (You can use the notice at the bottom of the form to send to the tenant). If you are the sole agricultural tenant yourself, sign certificate 2 but insert 'not applicable' in the tenant details.

Certificate 1

None of the land to which the application relates is or is part of any agricultural holding.

Signed J.K. Merchant ~~Applicant~~/Agent) Date 7.9.92

Certificate 2

The applicant has given the required notice to every other person who, at the beginning of the period of 21 days ending with the date of the application, was a tenant of an agricultural holding on all or part of the land to which the application relates.

State Name and ~~address of tenant~~: State Date notice served:

Signed ..... (Applicant/Agent) Date .....

NOTICE UNDER SECTION 27 OF TOWN AND COUNTRY PLANNING ACT 1971

TO BE COMPLETED BY APPLICANT OR HIS AGENT

Proposed development at

Take notice that application is being made to South Holland District Council by

for planning permission for

If you should wish to make representations about the application, you should make them in writing within 21 days from the date of service of this notice, to Chief Executive, South Holland District Council, Priory Road, Spalding, Lincolnshire.

Signed ..... Date .....

APPLICATION ASSESSMENT

Notes for Case Officer

Site Inspection | Accuracy | Neighbours | Boundaries

Site features | Other Open to rear - [illegible] large rear garden [illegible] Open to [illegible] neighbouring

Inspected by CS
Date [illegible]

Notice posted by CS
Date [illegible]

Resident Notices required

Sent | Delivered

Case Officer Conclusions 13/10 DMG.

Extension to property already. Proposal needs permission on this basis.
Considered acceptable in terms of design.
Neighbours not materially affected in my opinion.

RECOMMENDATION

COMMITTEE

Departure from Policy .....

Ward Member request .....

Recommend approval against material objection .....

Other circumstance viz: .....

Change to Committee recorded

DELEGATED

Case Officer DMG

Senior Officer .....

Case Officer Recommendation

Approve | Refuse

Signed [illegible]

Conditions/Reasons
(continue overleaf)

None

Notes to applicant

- [ ] Disabled
- [ ] Outstanding RM
- [ ] Amended plans

DC RECORD SHEET

APPLICATION REF:

Directions

Art 7 (Outlines)
RM checklist

	Siting	Design	Ext app	Access	Landscape
Previous					
Current					
Required					

Reg 4 Scale drawing ..... Highway S/W ..... Agric appraisal .....

Other ....

Precise details, for non-standard direction:

Senior Officer authorised: ..... Sent: .....

Revalidation after Direction

Information satisfactory/unsatisfactory Signed: .....

Further direction: Precise details:

Amended description:

New valid date: .....

Consultation/Publicity Required

		Requested	Sent
Extra Publicity:			
	Departure	.....	.....
	Setting of LB	.....	.....
	Public Right of Way	.....	.....
	Discretionary	.....	.....
Extra Consultations:			
	Dept of Transport	.....	.....
	Environmental Serv.	.....	.....
	LB/Cons. Area - Local	.....	.....
	- Local & National	.....	.....
	- English Heritage	.....	.....
	Consultant: Name.....		..... Order No .....
	Other:	.....	.....

Case Officer DAVID G GODLEY **Recorded on board:**

ADMIN RECORD SHEET

Initial

Submitted Fee £ 55.

Receipt Issued P1692

Date first Rec'd 10 SEP 1992

Registration

Reference H11/0966/92

Cross-Ref N/A

Date 11-SEP-92 LAB

Validation

TYPE FULL.

Earliest permission

Site area

No of dwellings

Floorspace 24.20.

Description

Tech

Certificate
Site plans
Description

Accuracy
Incomplete form

Fees

Nil fee

Previous app Type

Discounted fee

Correct fee £55

Additional Refund

Receipt Issued

Not Better site plans to come Arm

Information

Newbuild/Redevelopment/Change of use/Extension/Alteration/Works

Earlier permission Ref

RM

	Siting	Design	Ext app	Access	Landscaping
Previous					
Current					

Index sheets 310.

OS No's

Grid ref 5[illegible] 3[illegible].

Ward K

Parish L. SUTTON

Inside IBD YES

Inside LP area YES

TR Rural
TR Bypass
Level Cross
Footpath

CA
LB
TPO

Linked to site

Ref

Linked to property

Ref

O 105408

Planning Records:
Earlier apps

347/89
1299/90.

B Reg Records:
Already submitted - Ref
Request
Requested

. .N SMITH Dip TP MRTPI
Director of Planning & Building Control Services
Planning & Building Control Department,
Council Offices,
Priory Road, Spalding,
Lincolnshire. PE11 2XE

Telephone: (0775) 761161
Fax: (0775) 710772

SOUTH HOLLAND DISTRICT COUNCIL

Application no: H11/0966/92 Type: FULL

Applicant: Mr & Mrs J C Issott
Tel:

Agent: G R Merchant
0406 370853

Description: Conservatory

Location: 29 Lancaster Drive
Long Sutton
Spalding

Valid date: 10-SEP-92
Target dates:
To case officer 15-SEP-92
Inspected by 20-SEP-92
Extra contacts 25-SEP-92
Report if not clear by 15-OCT-92

Terminal date: 05-NOV-92
Target Committee: 27-OCT-92
Report deadline: 13-OCT-92

Case Officer:
D M GEDNEY

DEVELOPMENT/CONSTRAINTS

Size: 24.2 M2
Category: Extension
Listed building:
Conservation Area:

CONSULTATIONS CARRIED OUT

		Sent	Expiry
Clerk to Long Sutton	0406 362402	15-SEP-92	29-SEP-92
Cllr D A Tennant		15-SEP-92	29-SEP-92
Cllr E J Clarey	0406 363141	15-SEP-92	29-SEP-92
Cllr M D Booth	0406 350034	15-SEP-92	29-SEP-92
Site/Press Advert MIN		18-SEP-92	09-OCT-92

LCC - No Objections Jc as 16/9/92

BR. SMITH Dip TP MRTPI
Director of Planning & Building Control Services
Planning & Building Control Department,
Council Offices,
Priory Road, Spalding,
Lincolnshire. PE11 2XE

Telephone: (0775) 761161
Fax: (0775) 710772

SOUTH HOLLAND DISTRICT COUNCIL

Application no: H11/0966/92

Applicant: Mr & Mrs J C Issott
29 Lancaster Drive
Long Sutton
Spalding
Lincs

Agent: G R Merchant
4 Chapel Gardens
Whaplode
Spalding
Lincs

Description: Conservatory

Location: 29 Lancaster Drive Long Sutton
Spalding

Type: FULL

Date received: 10-SEP-92

15-SEP-92

Dear Sir/Madam

CONSULTATION WITH PARISH COUNCIL

I have received an application for the above proposal and enclose a copy for your information. Any observations which the Parish Council wish to make should be set out below and returned to me by 30-SEP-92. If no observations have been received by that date, it will be assumed that the Parish Council have no comments to make. The officer dealing with this application is D M GEDNEY

Yours faithfully
B SMITH
Director of Planning and Building Control Services

Clerk to Long Sutton PC
56 Garnsgate Road
Long Sutton
Spalding Lincs
PE12 9BT

FOR PARISH COUNCIL USE ONLY

Comments:

No objections

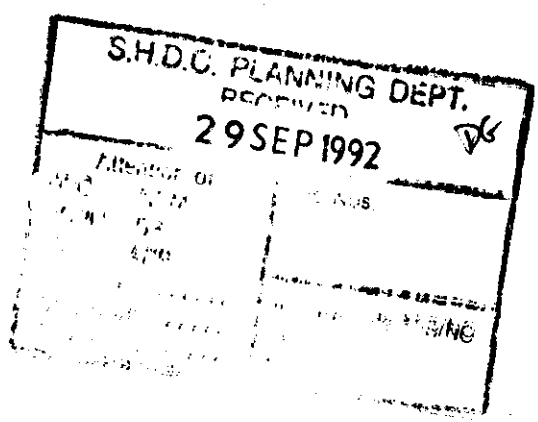

Signed: [signature]

S.H.D.C. PLANNING DEPT.
RECEIVED
29 SEP 1992

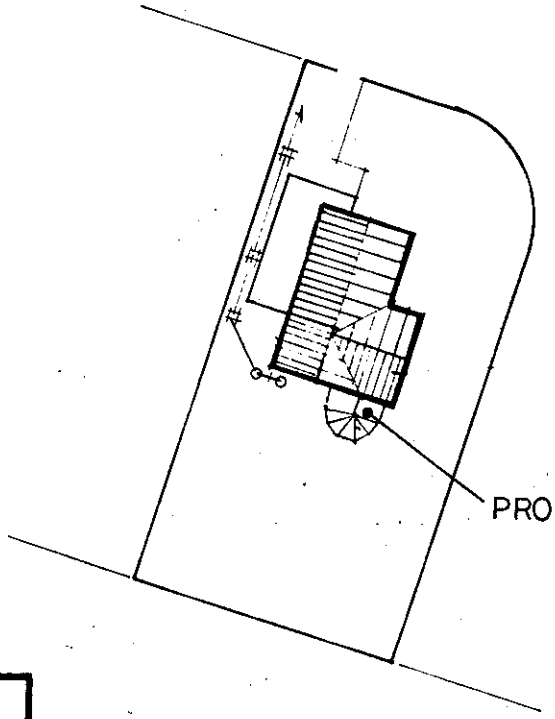

SOUTH HOLLAND D.C.
PLAN DEPT.
10 SEP 1992
REF 0966/92

SITE PLAN.

SCALE: 1/500.

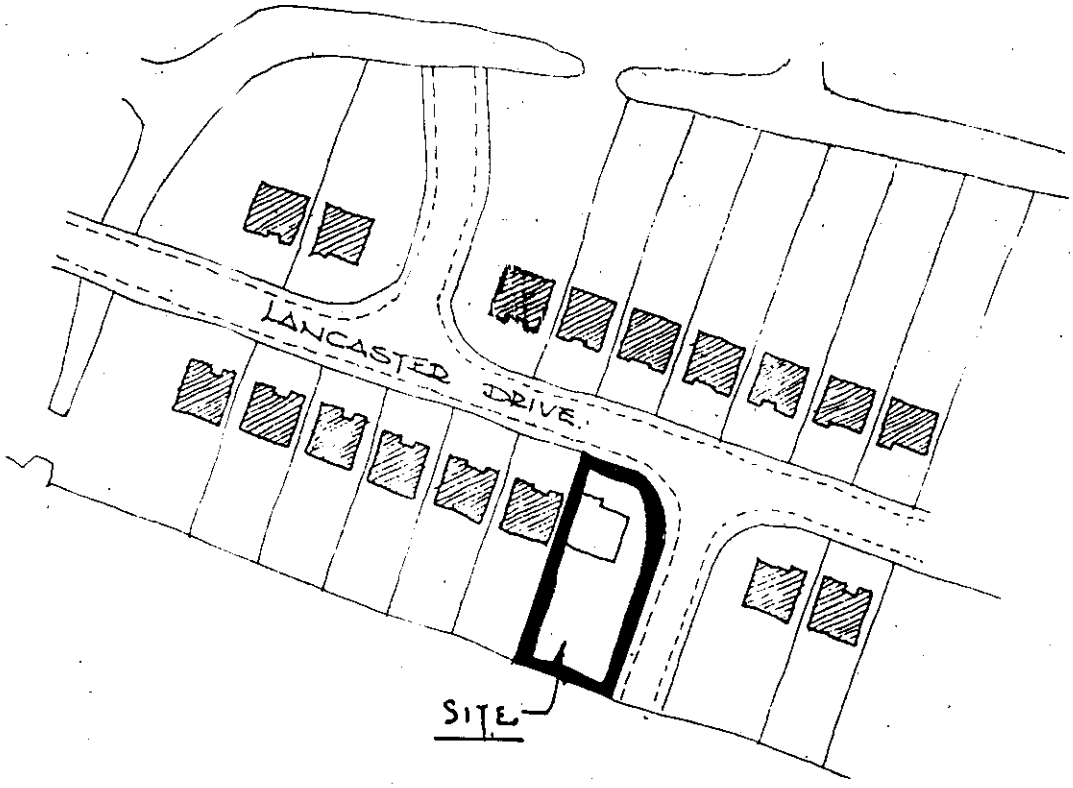

LOCATION PLAN.

SCALE: 1/1250.

MAIN STRUCTURE :
Conservatory Frames - PVCU extrusions reinforced with galvanised steel where required.
Conservatory Sections - Fully reinforced with external aluminium couplings and corner posts.
Glazing Bars - PVCU extrusion with galvanised steel reinforcing coupled with additional support by means of extruded aluminium box section. This system allows for snow loading and roof access if specified.

GLAZING :
Walls -4-16-4 Grade A Toughened Safety glass (BS 6206)
Roof - 16mm triple skinned makralon polycarbonate.
Certified products manufactured under BS 5750 and Quality System BS 5713. Glazing is to BS 6262.

FOUNDATIONS :
All dwarf walls and foundations to be in accordance with local Building Control Office requirements.
Concrete bases are steel reinforced.

NOTE : ALL SIZES SHOWN ARE EXTERNAL PVCU DIMENSIONS.

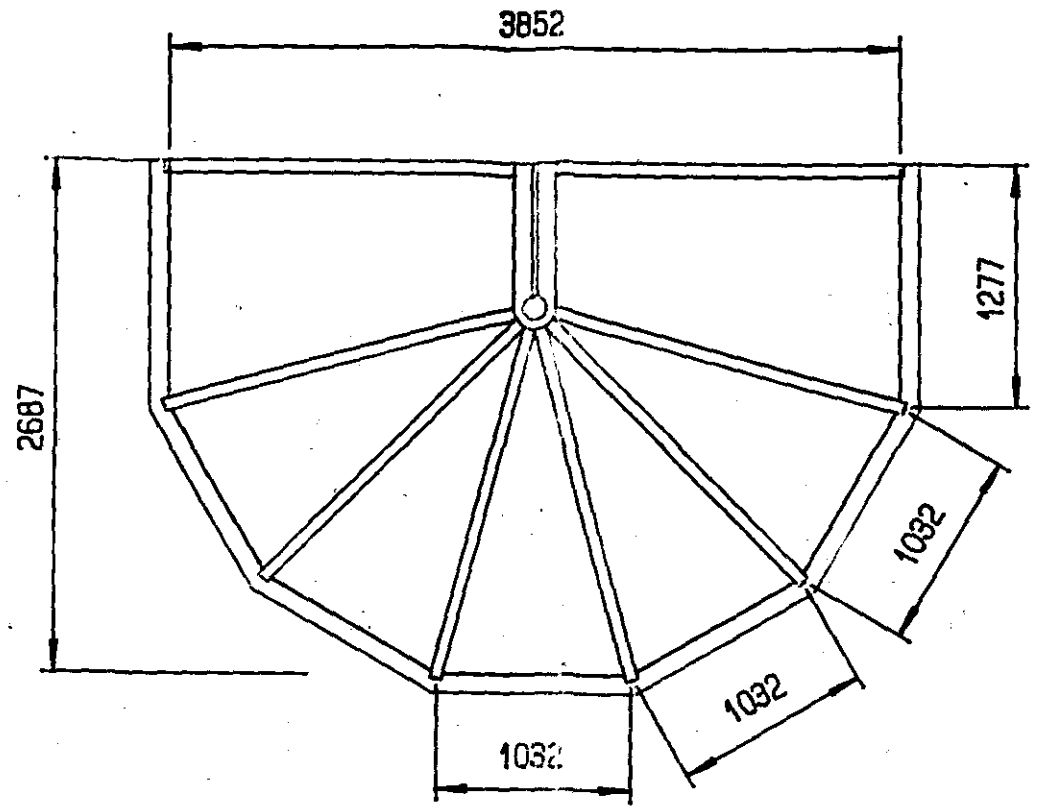

SOUT... PLAN... 10 SEP 1992 REF 0966/92

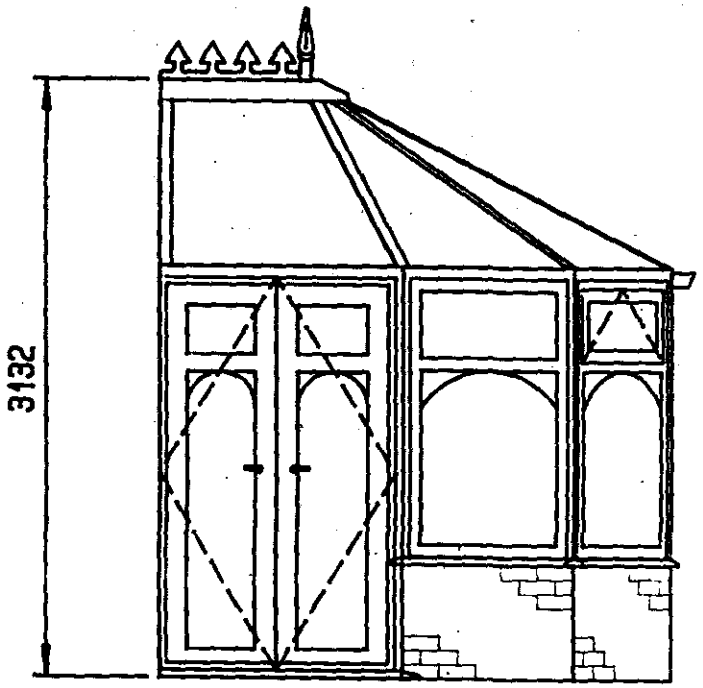

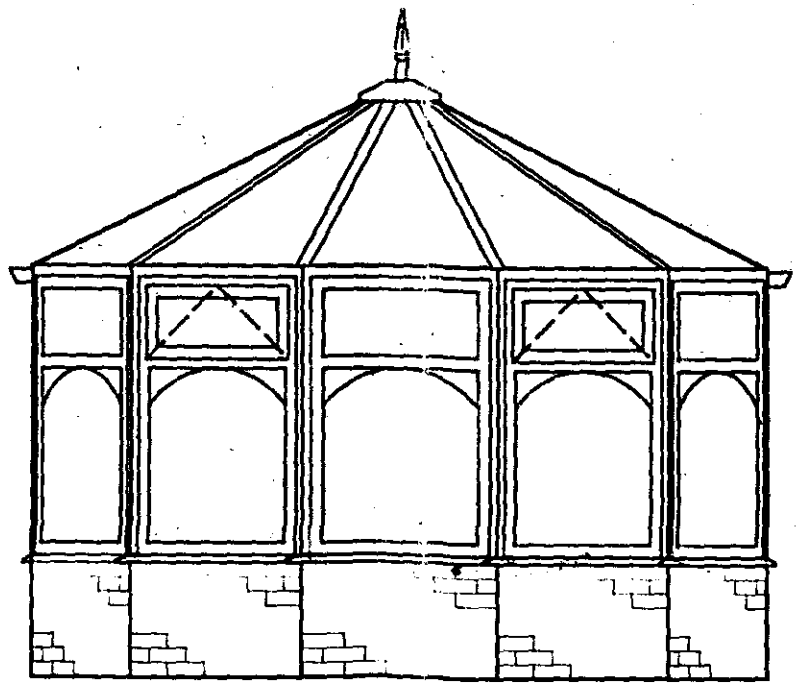

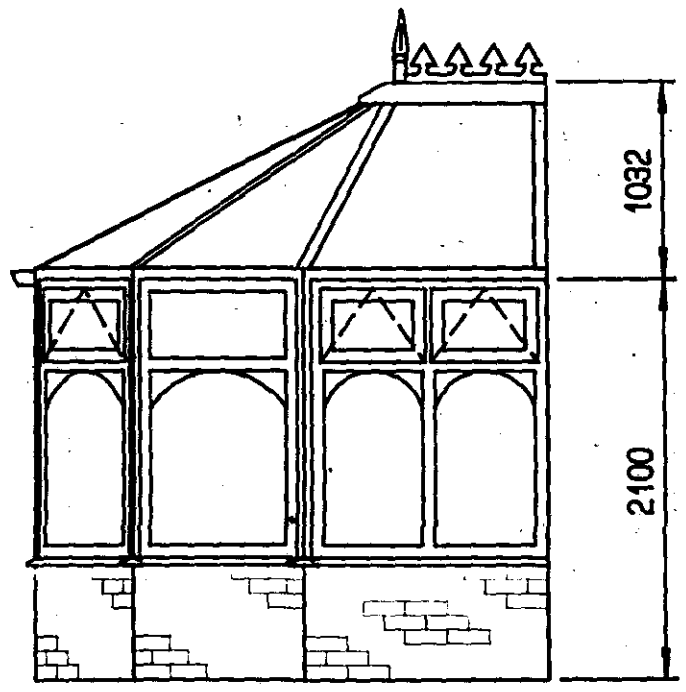

POSH WINDOWS AND CONSERVATORIES
1184 LINCOLN ROAD
WERRINGTON
PETERBOROUGH PE4 6LA
TEL: 0733 322888
FAX: 0733 322590
VAT No 576 4597 85

REF. No.	EPTB308
NAME	MR & MRS ISSOTT
ADDRESS	29 LANCASTER DRIVE LONG SUTTON LINCS.
TELEPHONE	0406 362969

VICTORIAN CONSERVATORY

DRAWN	P HURST
DATE	20.08.1992
SCALE	1: 40

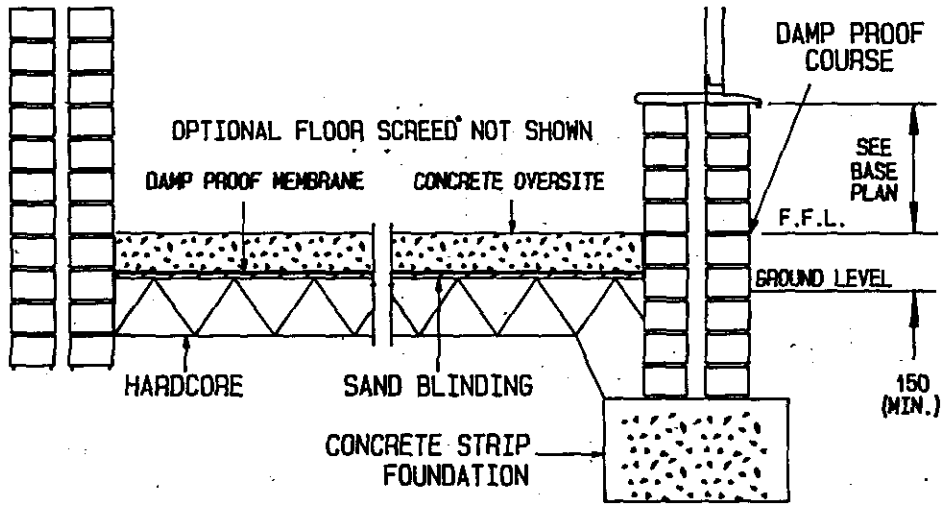

TYPICAL SECTION THROUGH BASE
CONCRETE STRIP FOUNDATION WITH CAVITY WALL

SCALE 1: 20

MAIN STRUCTURE :
Conservatory Frames - PVCU extrusions reinforced with galvanised steel where required.
Conservatory Sections - Fully reinforced with external aluminium couplings and corner posts.
GLAZING BARS - PVCU extrusion with galvanised steel reinforcing coupled with additional support by means of extruded aluminium box section. This system allows for snow loading and roof access if specified.

FOUNDATIONS :
All dwarf walls and foundations to be in accordance with local Building Control Office requirements.
Concrete bases are steel reinforced.

NOTE : ALL SIZES SHOWN ARE EXTERNAL BRICK DIMENSIONS.

10 SEP 1992
REF 0966/92

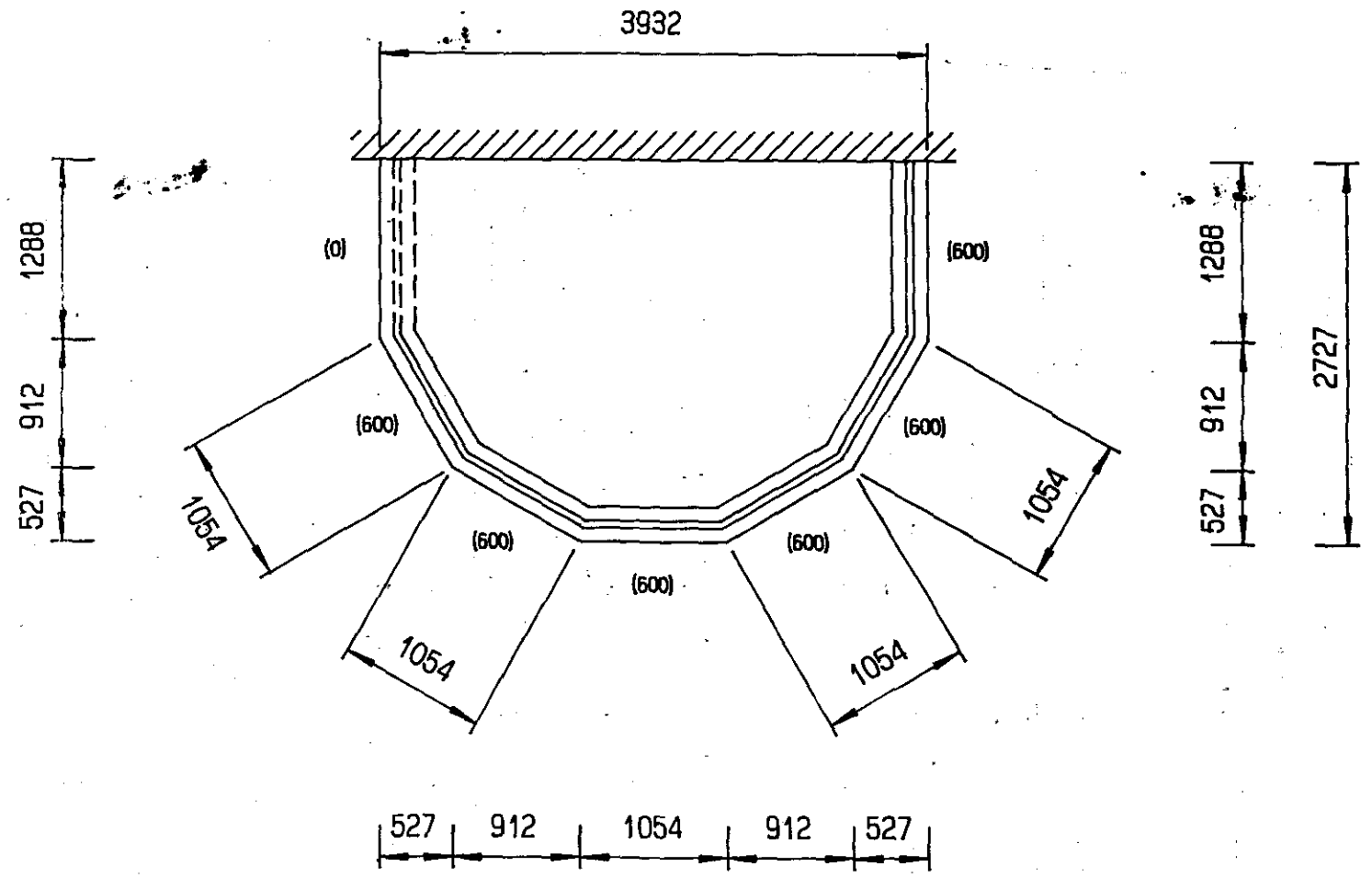

POSH WINDOWS AND CONSERVATORIES

1184 LINCOLN ROAD
WERRINGTON
PETERBOROUGH PE4 6LA
TEL: 0733 322888
FAX: 0733 322590
VAT No 576 4597 85

REF. No.	EPTB308
NAME	MR & MRS ISSOTT
ADDRESS	29 LANCASTER DRIVE
	LONG SUTTON
	LINCS.
TELEPHONE	0406 362969

CONSERVATORY BASE DETAILS

DRAWN	P HURST
DATE	20.08.1992
SCALE	1: 50
DRG. No.	P308