Notes and Revisions

Do not scale from this drawing.

This drawing is copyright and may not be altered, traced, copied, photographed or used for any purpose other than that for which it is issued without written permission from Messrs. Status Design.

The General Contractor is to check all dimensions on site and report discrepancies to the Architect.

All details shown on this drawing are based upon typical site conditions related to the area. No responsibility can be accepted for abnormal conditions unless reported to the Architects, so that design amendments may be considered.

Please note: This drawing is not a conveyance drawing.

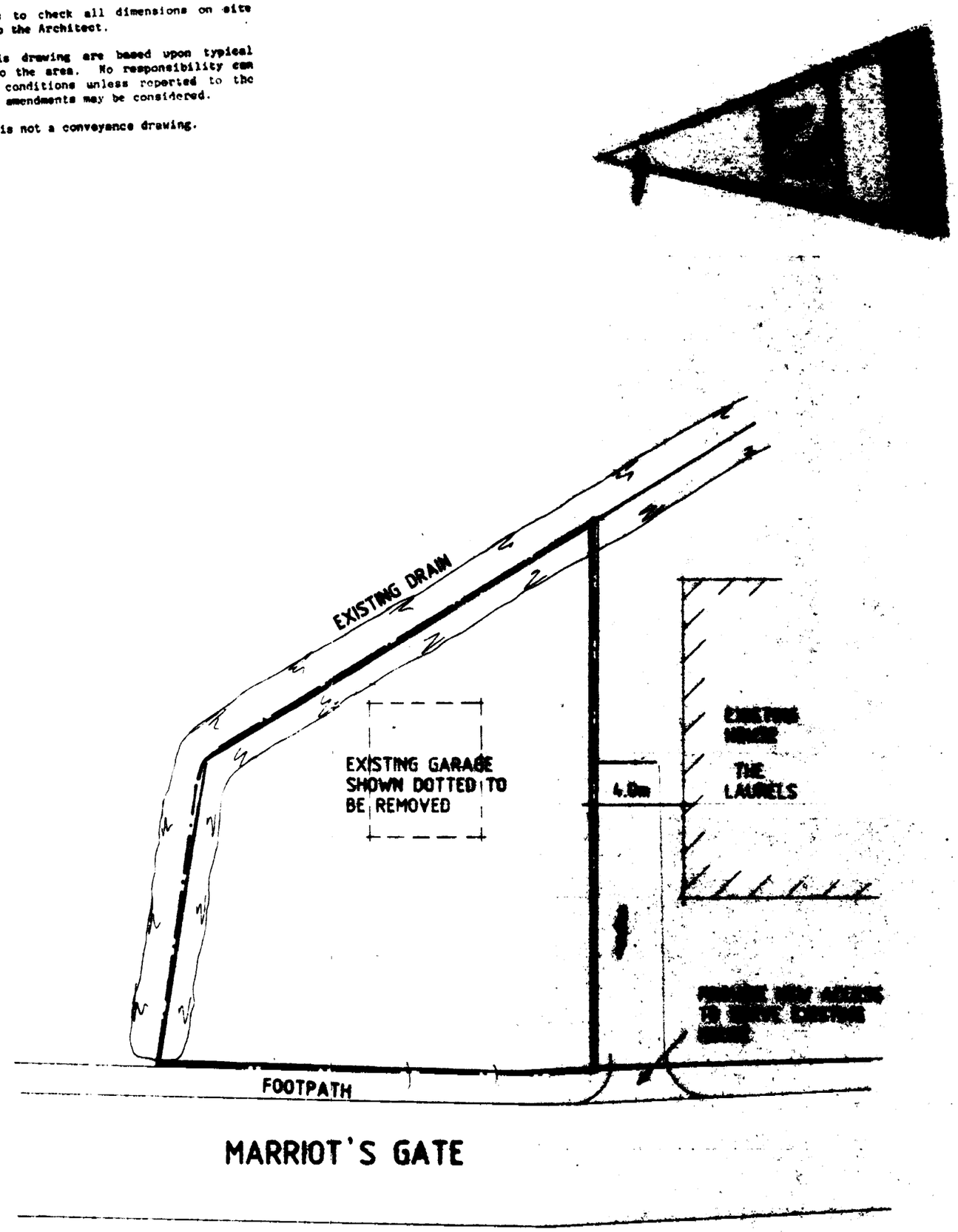

MARRIOT'S GATE

SITE PLAN

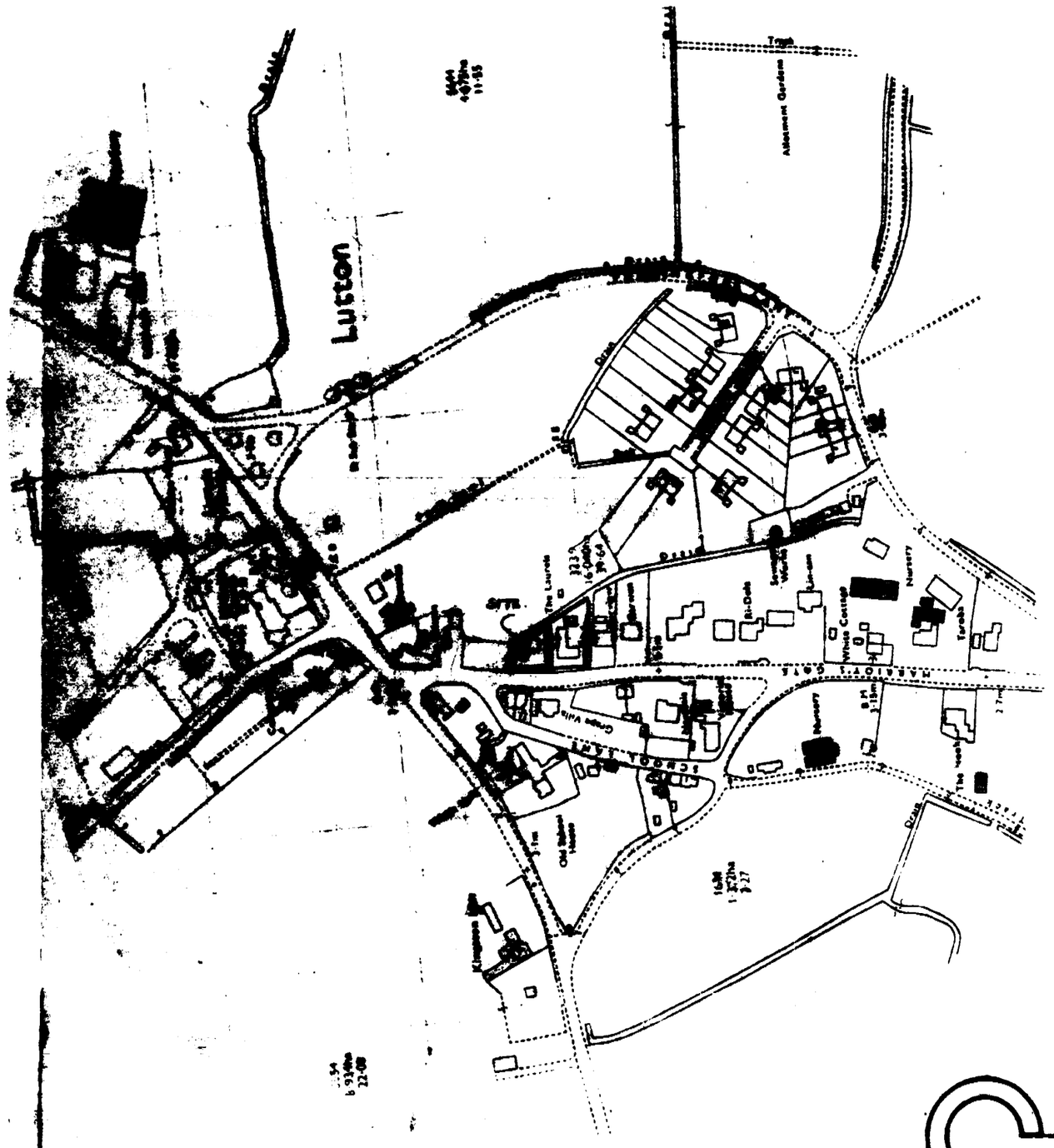

LOCATION PLAN

STATUS DESIGN

4 PRINCES STREET, HOLBEACH, LINCS. PE12 7BB

0406 23543

PROPOSED DWELLING AT MARRIOT'S GATE, LUTTON FOR

MR. & MRS. I. KNIGHT

SOUTH HOLLAND D.C.
PLAN CHECKED
06 JAN 1993
DATE 8006/93

1:200 1:2500 771684/1

DEC-92 B.GILHAM

Architectural, Planning & Building Design Consultants

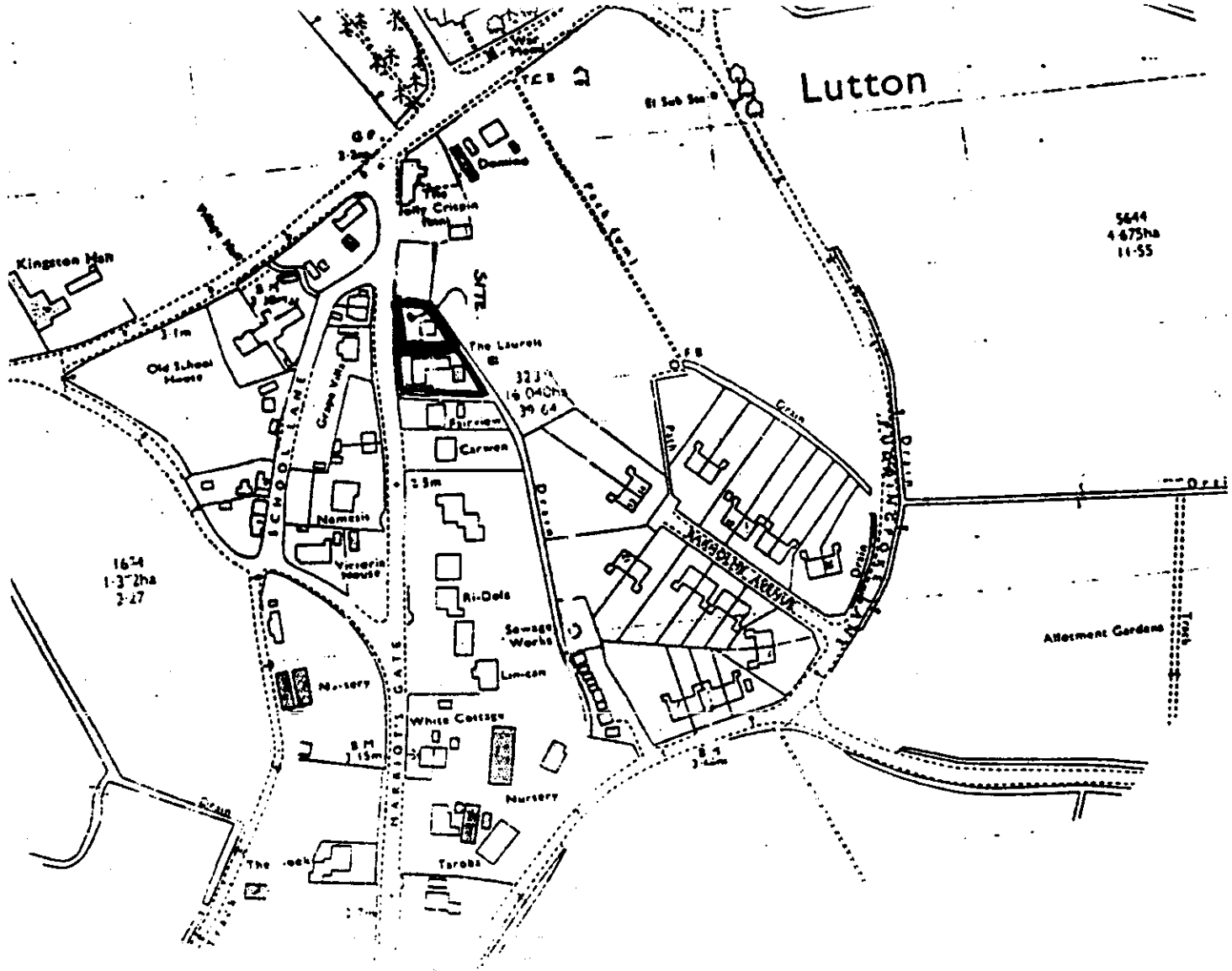
Lutton
Kingston Hall
Old School House
Grape Villa
SCHOOL LANE
Nemesis
Victoria House
Nursery
MARRIOTT'S GATE
The Laurels
Fairview
Carwen
Ri-Dola
Sewage Works
Lin-can
White Cottage
Nursery
Taroba
Domino
The Jolly Crispin
Allotment Gardens
Drain
Path
5644
4·675ha
11·55

FOUR COPIES REQUIRED

PLANNING APPLICATION

For office use only

Application No. H12/0006/93

Date Registered 06 JAN 1993

1. Please complete in block letters

NAME AND ADDRESS OF APPLICANT

Mr & Mrs I Knight
The Laurels
Marriots Gate
Lutton
Spalding
Lincs

Tel. No.

NAME AND ADDRESS OF AGENT

(if form completed by agent)
Status Design
4 Princes Street
Holbeach
Spalding Lincs PE12 7BB
Tel. No. 0406 24343
(Personal contact name) B. Gilham

Please complete in block letters

FULL POSTAL ADDRESS OF THE APPLICATION SITE

The Laurels, Marriots Gate, Lutton, Spalding, Lincs

OFFICE COPY

Please complete in block letters

DESCRIPTION OF PROPOSED DEVELOPMENT

New Access to Existing House

Please complete

I attach
* Four copies of all plans
* an ownership certificate (see back page)
* a fee of £60.00 If you consider no fee is payable include a written explanation instead.

Signed B. [signature] Date 4th January 1993 Previous application No.

Please tick **one** box and answer the extra questions under that section.

2. **TYPE OF APPLICATION**

This is a **full** application for change of use and/or new building works [✓] ➡ Now complete Parts 3, 4 and 5 and an Ownership Certificates

or This is an **outline** application [ ]

Please state Site Area [ ] (Hectares)

Please tick **any** box where you are including details which you wish to be considered as part of this application.

Siting [ ] Design [ ] External Appearance [ ]

Means of Access [ ] Landscaping [ ]

Now complete Parts 3 and 5 and an Ownership Certificate.

or This is a **reserved matters** application. [ ]

A. Please state Reference Number of outline permission.
B. Please state which reserved matters are dealt with in this application.
Now complete Part 4 only

or This is an application for **renewal** of temporary permission or **continuation** without complying with planning condition. [ ]

A. Please state reference Number of previous permission
B. Please state Condition Number referred to
Now complete an Ownership Certificate

or This is an application for **modification** of a condition on a planning permission which has not yet been implemented. [ ]

A. Please state Reference Number of pervious permission
B. Please state Condition Number referred to
C. Please state variation required
Now complete an Ownership Certificate.

TYPE OF DEVELOPMENT

3. A. Please state whether the proposal involves:- (Tick one or more boxes)

(i) New Dwellings		If so, how many:
(ii) Other new building(s)		
(iii) Alterations or extension		
(iv) Change of use		

4. A. If building works are proposed, please state extra floor space to be created:	sq. metres
B. Please state size of any new structure:- (a) max. height:	metres
(b) max. length:	metres
(c) max. width:	metres
C. Please state type and colour of materials for facing external walls:	
D. Please state type and colour of roofing materials.	
E. Has a survey of the site been undertaken? State Yes or No	

5. **GENERAL INFORMATION** Please complete each section

EXISTING USES
Please state existing or, if vacant, the last use(s) of site.

Garden

ACCESS TO ROADS (VEHICULAR AND PEDESTRIAN) Please tick **one** box

A. There will be **no** new access to a public road and **no** alteration to any existing access to a public road

or

B. There will be a new or altered access to a public road ✓ ➡ If so, name of road: Marriots Gate
Will there be –
Individual access(es) ✓
New estate road

C. What provision will be made for garages or parking within the site?

On site parking/garaging

TREES Please tick **one** box

A. The proposal does **not** involve the felling of any trees
B. The proposal does involve the felling of one or more trees ➡ If so, please show details on plans.

DRAINAGE Please complete

A. Please state how surface water will be disposed of	N/A
B. For estate developments, please state how highway surface water will be disposed of	N/A
C. Please state whether a land drain will be affected	No

D. Foul sewerage will be disposed of to:
Mains sewer ☐ Cesspool ☐ Septic tank ☐

PLEASE COMPLETE IN ALL CASES

	State Yes or No	
The proposal is in connection with agriculture	No	➡ If so, **please give details in Part 6**
The proposal affects a listed building	No	
The proposal affects a public right of way	No	
The proposal is known to affect contaminated or filled land	No	
The proposal is for industrial, warehousing, offices, shopping or similar commercial purposes.	No	➡ If so, **please complete Part 7**
In cases where a statutory consultation will be required, please state whether you have sent a copy of the application to the consultee yourself. If yes, please give date sent.	N/A	➡ Date: Consultee(s)
Is this application related to a previous submission?	No	➡ Application No.

6. **ANY OTHER INFORMATION** Please add any details you wish in support of your application.
Continue on separate sheet if necessary.

OWNERSHIP CERTIFICATES

PLEASE COMPLETE ALL THREE SECTIONS.

1. **APPLICANT'S INTEREST** Please state interest in site (e.g. owner, prosp. purchaser) (Please remember to indicate on the location plan any other land under your control).	Owner

2. OWNERSHIP OF THE SITE

This certificate is to make sure that the owners of land are aware of applications made on it.

If the applicant is the **sole owner of the whole site,** complete **Certificate A.**
In **any other case** (i.e. if the applicant is a prospective purchaser, or a tenant, or a joint owner, or the sole owner of only part of the site) then you must give notice to all other owners, and complete **Certificate B.** (An "owner" is a person having a freehold interest, or having a leasehold interest where seven years or more remains unexpired). If you are unable to trace the owner, please contact the Planning Office as a different certificate will be required.

Certificate A Nobody except the applicant was an owner of any part of the land to which the application relates at the beginning of the period of 21 days ending with the date of the accompanying application.

Signed ..... (Applicant / Agent) Date 04.01.93

Certificate B The applicant has given the required notice to everyone else who were owners of any part of the land to which the application relates at the beginning of the period of 21 days ending with the date of the accompanying application.
Owner's Name:
Address of owner at which notice was served: State Date notice served:

Signed ..... (Applicant / Agent) Date .....

3. AGRICULTURAL HOLDINGS CERTIFICATE

If the land is not in agricultural use complete Certificate 1.
If the land is agricultural, but farmed by the owner and there is no agricultural tenant, complete Certificate 1.
If the site does relate to an agricultural holding, you must give notice to the tenant, and complete Certificate 2. If you are the sole agricultural tenant yourself, sign certificate 2 but insert 'not applicable' in the tenant details.

Certificate 1 None of the land to which the application relates is or is part of any agricultural holding.

Signed ..... (Applicant / Agent) Date 04.01.93

Certificate 2 The applicant has given the required notice to every other person who, at the beginning of the period of 21 days ending with the date of the application, was a tenant of an agricultural holding on all or part of the land to which the application relates.
Tenant's Name:
Address of tenant at which notice was served: State Date notice served:

Signed ..... (Applicant / Agent) Date .....

APPLICATION ASSESSMENT

Notes for Case Officer

Site Inspection | Accuracy | Neighbours | Boundaries

Site features | Other Existing access to garage. Frontage privet hedge Footpath along frontage

Inspected by DMG
Date 20/1

Notice posted by DMG
Date 20/1

Resident Notices required

Sent | Delivered

Case Officer Conclusions DMG 4/2

County Highways consider proposal acceptable in highway grounds
No objections raised.

RECOMMENDATION

COMMITTEE

Departure from Policy .....

Ward Member request .....

Recommend approval against material objection .....

Other circumstance viz: .....

Change to Committee recorded

DELEGATED

Case Officer DMG

Senior Officer .....

Case Officer Recommendation

~~Approve~~ | Refuse

Signed DM Gadsby

Conditions/Reasons
(continue overleaf)

Notes to applicant

- [ ] Disabled
- [ ] Outstanding RM
- [ ] Amended plans

DC RECORD SHEET

APPLICATION REF:

Directions

Art 7 (Outlines)
RM checklist

	Siting	Design	Ext app	Access	Landscape
Previous					
Current					
Required					

Reg 4 Scale drawing ___ Highway S/W ___ Agric appraisal ___

Other ___

Precise details, for non-standard direction:

Senior Officer authorised: _____ Sent: _____

Revalidation after Direction

Information satisfactory/unsatisfactory Signed: _____

Further direction: Precise details:

Amended description:

New valid date: _____

Consultation/Publicity Required

	Requested	Sent
Extra Publicity:		
Departure	_____	_____
Setting of LB	_____	_____
Public Right of Way	_____	_____
Discretionary	_____	_____
Extra Consultations:		
Dept of Transport	_____	_____
Environmental Serv.	_____	_____
LB/Cons. Area - Local	_____	_____
- Local & National	_____	_____
- English Heritage	_____	_____
Consultant Name _____ _____		_____
		Order No ___
Other:	_____	_____

Case Officer DAVID GODLEY Recorded on board:

ADMIN RECORD SHEET

Initial

Submitted Fee £ 60

Receipt Issued P2091

Date first Rec'd 06 [illegible] 1993

Registration

Reference H 12/0006/93

Cross-Ref N/A

Date 8/1/93

Validation

See 5/93 also

TYPE FULL

Earliest permission

Site area

No of dwellings

Floorspace

Description

Tech

Certificate
Site plans
Description

Accuracy
Incomplete form

Fees

Nil fee

Previous app
Type

Discounted fee

Correct fee 60

Additional
Refund

Receipt
Issued

Information

Newbuild/Redevelopment/Change of use/Extension/Alteration/Works

Earlier permission Ref

RM

	Siting	Design	Ext app	Access	Landscaping
Previous					
Current					

Index sheets 154

OS No's

Grid ref 543250 325420

Ward K

Parish LUTTON

TR Rural
TR Bypass
Level Cross
Footpath

CA
LB
TPO

Inside IBD YES

Inside LP area NO

Linked to site

Ref 1052

Linked to property

Ref

Planning Records:
Earlier apps

005/93

B Reg Records:
Already submitted - Ref
Request
Requested

APPLICATION REFERENCE: H12/0005/93 DATE RECEIVED: 06-JAN-93

TYPE: Outline

DESCRIPTION: Erection of one dwelling

LOCATION: Marriots Gate, Lutton

APPLICANT: Mr & Mrs I Knight AGENT: Status Design

APPLICATION REFERENCE: H12/0006/93 DATE RECEIVED: 06-JAN-93

TYPE: Full

DESCRIPTION: New access to existing house

LOCATION: The Laurels, Marriots Gate, Lutton

APPLICANT: Mr & Mrs I Knight AGENT: Status Design

REASON FOR COMMITTEE CONSIDERATION

Sub - Ctee

H12/0005/93 - Recommendation of refusal.
H12/0006/93 - Parish Council comments.

SOUTH HOLLAND DISTRICT COUNCIL
REPORT TO PLANNING COMMITTEE
Date 28 MAY 1993

RECOMMENDATION

H12/0005/93 - Refuse Permission.

In the opinion of the Local Planning Authority the characteristics of the site are such that any dwelling upon it (with vehicular turning facilities which take up a significant proportion of the front garden) would constitute a cramped and undesirable form of development which would be out of character with this particular part of the village of Lutton. As such it is considered to be contrary to Structure Plan Policy 5A and also advice contained within Planning Policy Guidance Note No 3, 1992 (Housing).

H12/0006/93 - Grant Permission subject to conditions.

PLANNING ISSUES

1 Site a roughly triangular shaped side garden. Indicative plan shows small dwelling sited only 3 metres in from brink of drain forming rear boundary.

2 Consider development of dwelling much smaller than neighbouring and turning facilities in front garden will be out of character with more spacious feel of neighbouring property.

3 Outline planning permission was recently granted for a pair of semi-detached dwellings immediately to the north east of the site (H12/0198/92).

4 No objection to new access to existing dwelling.

REPRESENTATIONS

Parish Council: H12/0005/93 - Should enjoy a shared access with the adjoining property.

H12/0006/93 - Support subject to sharing new access with new dwelling if approved.

County Highways: Request vehicular turning facility.

SCHEDULE OF CONDITIONS

1 Before the access is commenced to be used details shall be submitted to and approved by the Local Planning Authority showing satisfactory turning facilities within the site.
Reason: To enable vehicles to enter and leave the highway in forward gear, in the interests of road safety.

APPLICATION REFERENCE: H12/0006/93

APPLICANT: Mr & Mrs Knight

REPORT TO PLANS SUB-COMMITTEE ON 28TH MAY 1993.

Addendum to report on page 10 of the report to Planning Committee on 9 March 1993.

ADDENDUM

At the Plans Sub-Committee Meeting held on the 22 March 1993 it was resolved that consideration of the application be deferred to enable the Director of Planning and Building Control Services to consider further the issues involved in the light of the decision made on H12/0005/93.

I have now had further discussions with both the applicants and the County Highways Authority. The former have informally stated that they wish the application to proceed since they may consider resubmitting or alternatively appealing against the decision made in respect of H12/0005/93.

However, given that the application for the dwelling has been refused, the County Highways Authority have stressed that they do not wish to encourage two accesses serving the same dwelling. As such, they have requested that if permission is granted a condition should be imposed stipulating that the existing access shall be stopped up permanently to the satisfaction of the Local Planning Authority.

---

1 TL 1

RECOMMENDATION - Grant Permission.

2 Y SCA Before the access is commenced to be used details shall be submitted to and approved by the Local Planning Authority showing satisfactory turning facilities within the site.
Reason: To enable vehicles to enter and leave the highway in forward gear, in the interests of road safety.

5 2 SCB Before the permitted access is commenced to be used the existing access between the site and Marriots Gate shall be stopped up permanently to the satisfaction of the Local Planning Authority. Reason: To reduce to a minimum the number of individual access points to the Class III County Road, in the interests of road safety.

Brian

Whilst Chris Briggs change of mind may be what the Ctte would like, when I asked him why he had no objection to the 2 accesses to serve 2 dwellings, but wanted only 1 to serve the single dwelling, he had no answer & admitted he was 'trying it on' to be helpful.

14/5

391. PLANNING APPLICATIONS (continued)

(b) Planning Applications Awaiting Site Inspections (continued)

Plan No and Applicant		Proposal
H14/0222/93 Patterson Properties		6 terrace cottages at Flaxmill Lane, Pinchbeck.

(To assess possible noise implications for the development from the adjoining commercial garage.)

H03/0295/93 Mrs J Earth	O.A.	3 bungalows (renewal of outline application H03/0774/90) at "Tara" Main Road, Hop Hole, Spalding.

(To assess the suitability of the site for the proposal in the light of the Council's policy relating to the character and design of development which has been adopted since the original planning permission.)

H02/0306/93 L Brisley	O.A.	Bungalow at 10 Plank Drove, Crowland.

(To establish whether or not the proposal is an appropriate form of infill development to permit in the open countryside.)

H16/0289/93 Mr and Mrs French	First floor extension at 26 Cleyhall Drive, Spalding.

(To assess the suitability of the site for the proposal.)

(c) Other Planning Applications Referred to the Sub-Committee for Determination

The following applications, which had previously been referred to the Sub-Committee for consideration, were determined as indicated:-

Plan No and Applicant	Proposal
H12/0006/93 DG Mr and Mrs I Knight	Access to existing house at The Laurels, Marriots Gate, Lutton.

RESOLVED: Planning permission be granted for the above development in accordance with the recommendation of the Director of Planning and Building Control Services.

H05/1316/92 Ashwood Homes	18 dwellings, plots 38 - 55, to be known as Phase III in the development of land off Foxes Low Road, Holbeach.

RESOLVED: Planning permission be granted for the above development in accordance with the recommendation of the Director of Planning and Building Control Services.

H16/0284/93 Swallow Homes Ltd	Residential development (105 houses and 25 bungalows) at Phase III, Wygate Park, Spalding.

RESOLVED: The Director of Planning and Building Control Services be authorised to grant planning permission for the above development, in accordance with his recommendation.

H16/0301/93 Stamford Construction	63 dwellings complete with roads and footpaths on land west of Woolram Wygate, Spalding.

RESOLVED: Consideration of the above application be deferred pending receipt of further information.

24th MAY 1993 PLANNING SUB-COMMITTEE
PLANNING APPLICATIONS - POST COMMITTEE INSTRUCTIONS

Application Number/ Applicant	Case Offr	Instructions/ Decision
H18/0064/93 J W Trayford	JB	Grant as recommended.
H20/0127/93 F S Campling	JB	DPBCS Authorised. Conditions to include: Enhanced planting between proposed building and residential dwellings. Restriction on hours of use, 2300hrs to be latest time allowed. Parking to be on other side so as to allow building to act as a noise buffer. Use to be restricted to bowling alley only.
H16/0091/93 Mr & Mrs Ball	PJU	Deferred for site visit. Insufficient time to visit site.
H13/0205/93 Dr & Mrs Rayner	DMG	Deferred for site visit. Insufficient time to visit site.
H09/0794/92 Mr & Mrs Britton	JB	Refused.
H08/0161/93 Mr T Sharpe	DJR	Deferred for site visit. Insufficient time to visit site.
H14/0222/93 Patterson Properties	DJR	Deferred for site visit. Insufficient time to visit site.
H23/0237/93 P & S W Hoyes	DMG	Grant as recommended.
H01/0277/93 Patterson Properties	PJU	DPBCS Authorised subject to re-alignment of access. Members not happy with access strip being excluded - agreement over maintenance needed.
H03/0295/93 Mrs J Earth	DJR	Deferred for site visit. Insufficient time to visit site.
H02/0306/93 L Brisley	PJU	Deferred for site visit. Insufficient time to visit site.
H16/0289/93 Mr & Mrs French	PJU	Deferred for site visit. Insufficient time to visit site.
H16/0632/92 H16/0655/92 1st National Bank	NRM	DBPCS Authorised as recommended. Look at access possibilities and advise applicant accordingly. **WAIT FOR MINUTE**
H12/0006/93 Mr & Mrs Knight	DMG	Grant as recommended. **WAIT FOR MINUTES** to check if any access requirements.

H05/1316/92 Ashwood Homes	DJR	Grant as recommended
H16/0284/93 Swallow Homes	DJR	DPBCS Authorised as recommended. Suggest meeting NRM/DJR/JC to provide overview of proposed development and a prediction of future development strategy.
H16/0301/93 Stamford Construction	DJR	Deferred. Outstanding matters to be resolved. Concern over space between dwellings
PO Report 12 Kingsgate, Gedney	JB	Approved as recommended subject to an enhanced planting scheme on the Western Boundary to minimise potential overlooking. **Mr Breese**: Check answer to letter of complaint. Mr Breese has stated that emphasis seems to have been placed on right of light instead of the main issue of overlooking. advise him of committee decision.
PO Report 15 Manor House Gardens, Abbey Walk, Crowland	NRM	Deferred for site visit. Insufficient time to visit site.

26th May 93

Signed _____

Principal Planning Officer

BRIAN SMITH Dip TP MRTPI
Director of Planning & Building Control Services
Planning & Building Control Department,
Council Offices,
Priory Road, Spalding,
Lincolnshire. PE11 2XE

Telephone: (0775) 761161
Fax: (0775) 710772

SOUTH HOLLAND DISTRICT COUNCIL

~~[illegible]~~ Com,

Application no: H12/0006/93 Type: FULL

Applicant: Mr & Mrs I Knight
Tel:

Agent: Status Design
0406 24343 B Gilham

Description: New access to existing house

Location: The Laurels
Marriots Gate
Lutton
Spalding, Lincs

Valid date: 06-JAN-93
Target dates:
To case officer 13-JAN-93
Inspected by 16-JAN-93
Extra contacts 20-JAN-93
Report if not clear by 10-FEB-93

Terminal date: 03-MAR-93
Target Committee: 17-FEB-93
Report deadline: 03-FEB-93

Case Officer:
D M GEDNEY

DEVELOPMENT/CONSTRAINTS

Size:
Category: Misc works
Listed building:
Conservation Area:

Other Constraints:

CONSULTATIONS CARRIED OUT

		Sent	Expiry
Clerk to Lutton PC	0775 724941	14-JAN-93	28-JAN-93
Cllr D A Tennant		14-JAN-93	28-JAN-93
Cllr E J Clarey	0406 363141	14-JAN-93	28-JAN-93
Cllr M D Booth	0406 350034	14-JAN-93	28-JAN-93
Site/Press Advert MIN		19-JAN-93	09-FEB-93

L.C.C Obs Attached for CB 4/2/93
~~[illegible] CB 2/1/93~~

SITE DETAILS

Grid ref: 543280 325420
OS Sheets: 154 Parcel:

Discussion held with B. Gilham 25/4

stressed that he wished the application to proceed given that the applicant may consider resubmitting or appealing against the decision in respect of A12/0005/93.

DMG

LINCOLNSHIRE COUNTY COUNCIL
DEPARTMENT OF HIGHWAYS AND PLANNING

FORM NO: H/A/3B

To: South Holland District Council Application Reference H12/0006/93

Form of notification by the County Director of Highways and Planning for DEVELOPMENT AFFECTING HIGHWAYS

With reference to the application dated
relating to the following proposed development:

1. National Grid Reference of a central point on site

	horizontal			vertical		
	4	3	2	2	5	4

2. Address or location

The Laurels, Marriots Gate Lutton

3. Name, classification and number of road

TH

4. Date application referred 21-1-93

5. State whether outline, detailed application etc.

Full.

6. Description of proposed development/change of use including access details

New Access To Dwelling

7. Delete as appropriate

Notice is hereby given under the provisions of article 15 of the Town and Country Planning General Development Order, 1988, that the County Council as local highway authority:—

a. ~~Does not wish to restrict the grant of permission~~.

b. (b) Requests that any permission given by the local planning authority shall include the conditions shown overleaf.

c. ~~Requests that the local planning authority refuse~~ the application (reason overleaf).

d. Requests the local planning authority to complete Form T.R. 108 para ~~10b as shown~~ overleaf.

Date: 2/2/93 Signed: [signature]
Director of Highways and Planning

CONDITIONS:—

Delete as appropriate

(i) For applications where items are to be reserved for subsequent approval in consultation with the Director of Highways and Planning

(ii) For other applications

(1) B23 ——— (drawing No H12/0006/93/1)

(2) B20 ——— Maximum Cost

Delete as appropriate

(i) REASONS FOR a, b, or c overleaf

(ii) COMMENTS FOR FORM T.R. 108 para 10b

(1) B21

(2) B7 ——— Class III County Road.

Note:— use continuation sheet(s) as necessary.

DRAWING No H12/0006/93/1

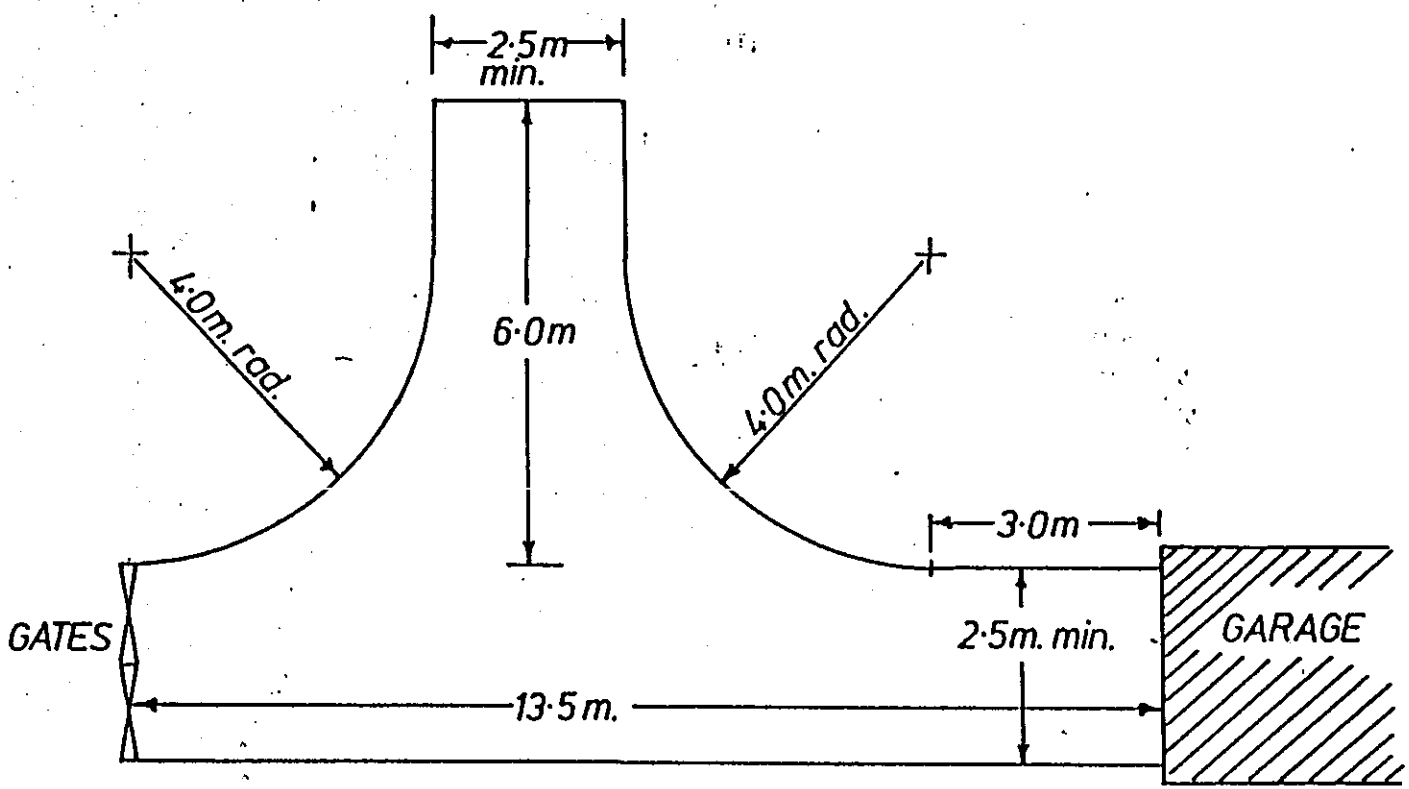

DETAIL OF DOMESTIC TURNING SPACE.

SCALE....1:100

BRIAN SMITH TP MRTPI
Director of Planning & Building Control Services
Planning & Building Control Department,
Council Offices,
Priory Road, Spalding,
Lincolnshire. PE11 2XE

Telephone: (0775) 761161
Fax: (0775) 710772

SOUTH HOLLAND DISTRICT COUNCIL

Application no: H12/0006/93

Applicant: Mr & Mrs I Knight
The Laurels
Marriots Gate
Lutton
Spalding, Lincs

Agent: Status Design
4 Princes Street
Holbeach
Spalding
Lincs, PE12 7BB

Description: New access to existing house

Location: The Laurels Marriots Gate
Lutton Spalding, Lincs

Type: FULL

Date received: 06-JAN-93

14-JAN-93

Dear Sir/Madam

CONSULTATION WITH PARISH COUNCIL

I have received an application for the above proposal and enclose a copy for your information. Any observations which the Parish Council wish to make should be set out below and returned to me by 29-JAN-93. If no observations have been received by that date, it will be assumed that the Parish Council have no comments to make. The officer dealing with this application is D M GEDNEY

Yours faithfully
B SMITH
Director of Planning and Building Control Services

Clerk to Lutton PC
7 Oakley Drive
Spalding
Lincs
PE11 2BN

S.H.D.C. PLANNING DEPT.
RECEIVED
20 JAN 1993

FOR PARISH COUNCIL USE ONLY

Comments:
Support, subject to sharing access with new dwelling. If approved

Signed:
N. Hoop

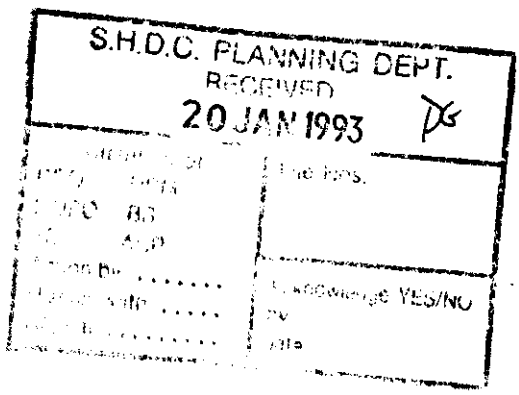

status design

ARCHITECTURAL & BUILDING DESIGN CONSULTANTS

STATUS HOUSE,
4 PRINCES STREET,
HOLBEACH, SPALDING,
LINCS. PE12 7BB

Tel. Holbeach (0406) 24343

South Holland District Council
Council Offices
Second Floor
Priory Road
Spalding
Lincs
PE11 2XE

Date

The person dealing with this matter is: B. Gilham

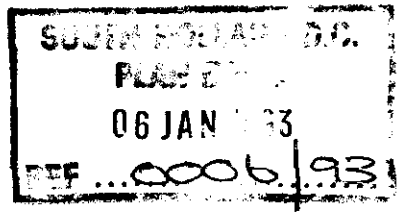

Our Ref: 771684/BG/AEW

Your Ref:

Dear Sir,

Re: PROPOSED NEW ACCESS TO EXISTING HOUSE AT THE LAURELS MARRIOTS GATE LUTTON FOR MR & MRS I KNIGHT

In respect of the above, please find enclosed the following:-

TOWN AND COUNTRY PLANNING APPLICATION

1. 4 No. copies duly completed submission form.
2. 4 No. copies drawing no. 771684/1.
3. Cheque to the value of £60.00 in respect of submission fee.

Yours faithfully

B. Gilham F.F.B.

Enc.

APPLICATION REFERENCE: H12/0005/93 DATE RECEIVED: 10-FEB-93

TYPE: Outline

DESCRIPTION: Erection of one dwelling

LOCATION: Marriots Gate, Lutton

APPLICANT: Mr & Mrs I Knight AGENT: Status Design

APPLICATION REFERENCE: H12/0006/93 DATE RECEIVED: 06-JAN-93

TYPE: Full

SOUTH HOLLAND DISTRICT COUNCIL
REPORT TO PLANNING COMMITTEE
Date - 9 MAR 1993

DESCRIPTION: New access to existing house

LOCATION: The Laurels, Marriots Gate, Lutton

APPLICANT: Mr & Mrs I Knight AGENT: Status Design

REASON FOR COMMITTEE CONSIDERATION

H12/0005/93 - Recommendation of refusal.
H12/0006/93 - Parish Council comments.

RECOMMENDATION

H12/0005/93 - Refuse Permission.

In the opinion of the Local Planning Authority the characteristics of the site are such that any dwelling upon it (with vehicular turning facilities which take up a significant proportion of the front garden) would constitute a cramped and undesirable form of development which would be out of character with this particular part of the village of Lutton. As such it is considered to be contrary to Structure Plan Policy 5A and also advice contained within Planning Policy Guidance Note No 3, 1992 (Housing).

H12/0006/93 - Grant Permission subject to conditions.

PLANNING ISSUES

1 Site a roughly triangular shaped side garden. Indicative plan shows small dwelling sited only 3 metres in from brink of drain forming rear boundary.

2 Consider development of dwelling much smaller than neighbouring and turning facilities in front garden will be

out of character with more spacious feel of neighbouring property.

3 Outline planning permission was recently granted for a pair of semi-detached dwellings immediately to the north east of the site (H12/0198/92).

4 No objection to new access to existing dwelling.

REPRESENTATIONS

Parish Council:	H12/0005/93 - Should enjoy a shared access with the adjoining property. H12/0006/93 - Support subject to sharing new access with new dwelling if approved.
County Highways:	Request vehicular turning facility.

SCHEDULE OF CONDITIONS

1 Before the access is commenced to be used details shall be submitted to and approved by the Local Planning Authority showing satisfactory turning facilities within the site.
Reason: To enable vehicles to enter and leave the highway in forward gear, in the interests of road safety.

PLANNING COMMITTEE - 9th March, 1993

165. PLANNING APPLICATIONS (Continued)

(b) **Applications Refused** (Continued)

Plan No. and Applicant		Proposal
H16/0014/93 Mr & Mrs S Parise	O.A.	Bungalow and garage including details of siting and means of access on land at rear of 46 Carrington Road, Spalding.
H16/0021/93 Mr C J & Mrs M G Tuke		Change of use to general industrial nature at Crown Hall Farm, Dozens Bank, Pode Hole.

(It was reported that the Parish Council had now indicated its support for the application.)

H16/1203/92 Crescent Traders		Advertisement consent for 8' x 4' fascia board (facing towards Sheep Market) at 31 The Crescent (side wall), Spalding.
H05/0087/93 J F & B Hook	O.A.	Two dwellings, including details of means of access at Branch's Lane, Holbeach.

(It was also agreed that the Director of Planning and Building Control Services be authorised to discuss with the applicant an appropriate development for the site.)

(c) **Applications Deferred**

Consideration of the following applications be deferred for the reasons indicated:-

Plan No. and Applicant		Proposal
H13/1177/92 D E Simpson		Kennel block for 8 greyhounds at 94 Seas End Road, Moulton Seas End.

(Pending a site inspection to assess the suitability of the site for the proposed development.)

H12/0005/93 Mr & Mrs I Knight	O.A.	Dwelling at Marriots Gate, Lutton.

(Pending a site inspection to assess the suitability of the site for the development and that the shared access arrangements are acceptable.)

H12/0006/93 Mr & Mrs I Knight	Access to existing house at The Laurels, Marriots Gate, Lutton.

(Pending a site inspection to assess the suitability of the site for the proposed development and the proposed access arrangements to serve it.)

H16/0015/93 S & S Developments Ltd	Change of use of three offices to bedsit accommodation (three units) at 24 Pinchbeck Road, Spalding.

(Pending a site inspection to assess the suitability of the site for the proposed development.)

H09/0031/93 Mr J Hayes	Extension to bungalow at 10 Kennedy Road, Holbeach.

(Pending a site inspection to assess the suitability of the site for the proposed development.)

Minutes of a meeting of the **PLANS SUB-COMMITTEE** held in Meeting Room 1, Council Offices, Priory Road, Spalding on Monday, 22nd March, 1993.

PRESENT

Councillors:

Mr. B. Alcock - Chairman
Mr T. Bray - Vice-Chairman

Mrs. P.J. Buffham	Mrs.E.O. Hall-Patch	Mr. T.G.M. Tyler
Mr. J. Clark	Mr. N.P. Judge, M.B.E	Mr. R.C. West
Mr. E.N. Davies	Mr. A.E. Naylor	Mr. M.C. White
Mr. J.A. Dobney	Mr. J.R. Pearl	

The Director of Planning and Building Control Services, the Deputy Director of Administration and the Principal Environmental Health Officer.

In attendance: The Press.

Apologies for absence were received from or on behalf of Councillors W.D. Skells and M.S.L. Rollinson.

196. MINUTES

The Minutes of the meeting held on 1st March, 1993 were signed by the Chairman as a correct record.

197. PLANNING APPLICATIONS

The following applications were determined as indicated following an inspection of each site:-

Plan No. and Applicant	Proposal
H13/1177/92 D E Simpson	Kennel block for 8 greyhounds at 94 Seas End Road, Moulton Seas End.

RESOLVED: As there was insufficient time to visit the site prior to the meeting, consideration of the above application be deferred pending a site inspection prior to the next meeting in order to assess the suitability of the site for the proposed development.

H12/0005/93 O.A. Dwelling at Marriots Gate, Lutton.
Mr & Mrs I Knight

RESOLVED: Planning permission be refused for the above development, in accordance with recommendation of the Director of Planning and Building Control Services.

DG H12/0006/93 Access to existing house at The Laurels,
Mr & Mrs I Knight Marriots Gate, Lutton.

RESOLVED: Consideration of this application be deferred to enable the Director of Planning and Building Control Services to consider further the issues involved, in the light of the decision made on H12/0005/93, and report to the next meeting.

(Councillor Mrs. E.O. Hall-Patch entered the meeting during consideration of the above application.)

H16/0015/93 Change of use of 3 offices to bedsit
S & S Developments Ltd accommodation (3 units) at 24 Pinchbeck Road, Spalding.