PROPOSED

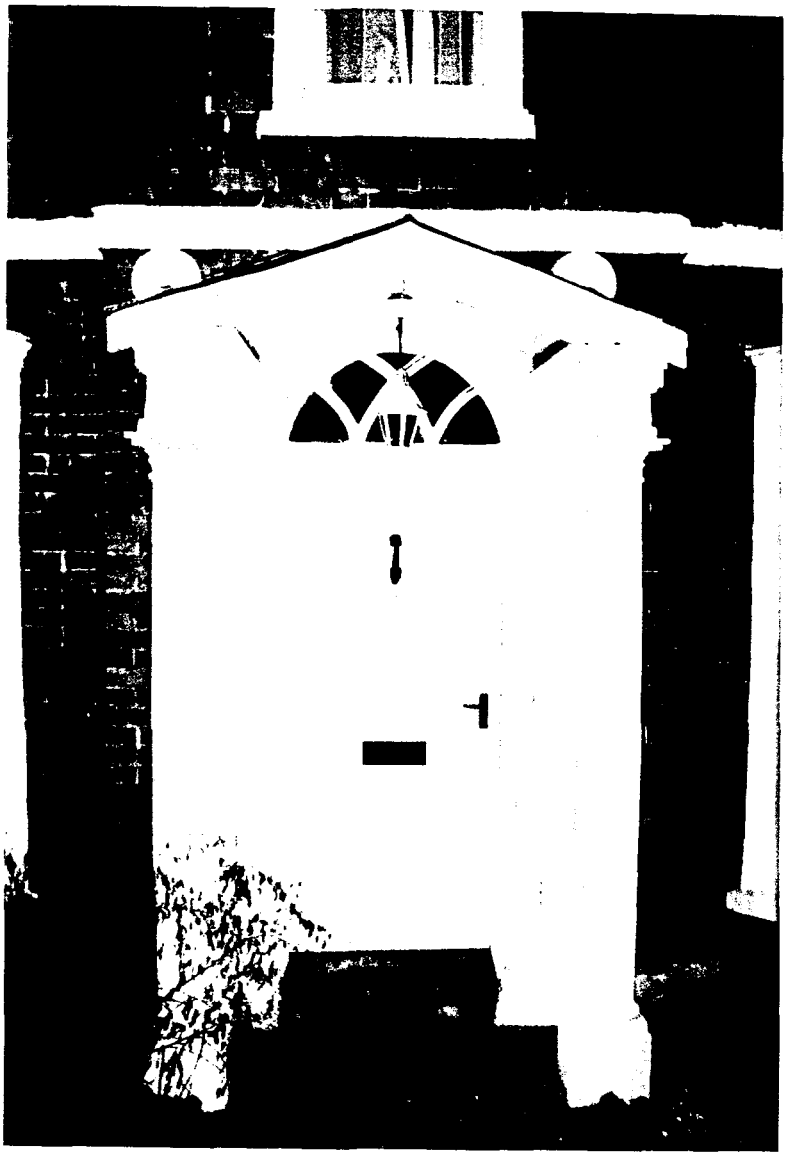



EXISTING

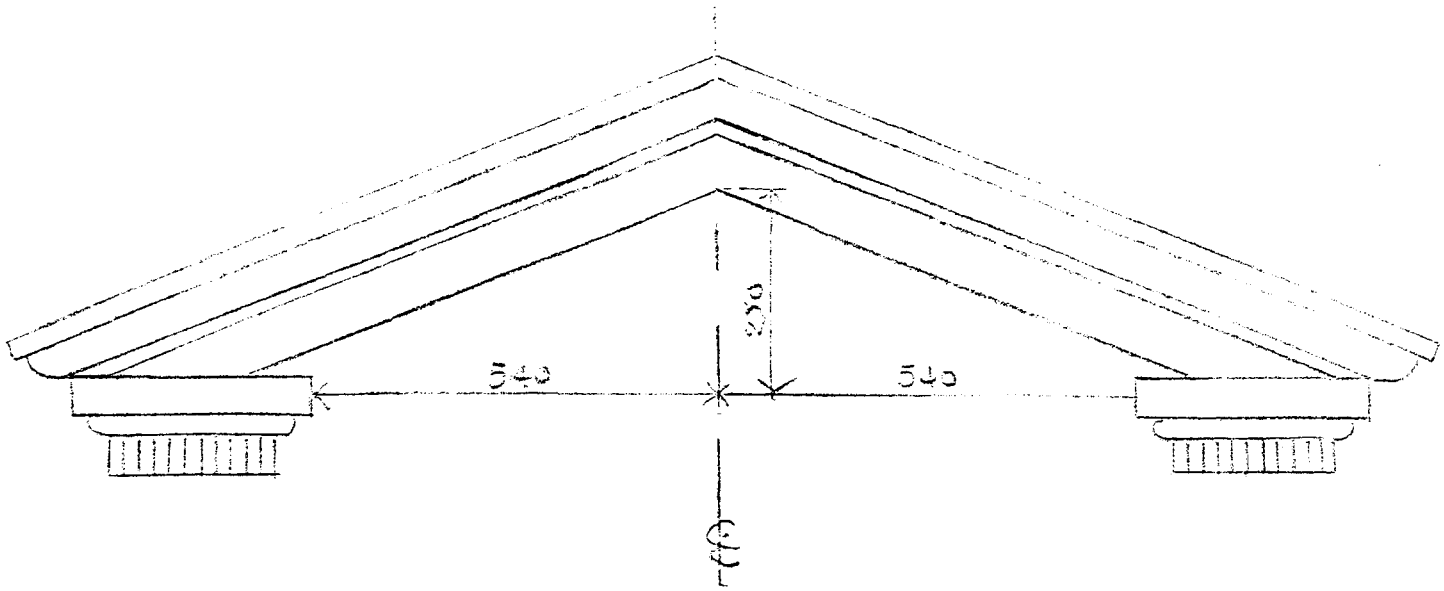

1: 10

DOORWAY -Boyfield House Moulton

Reinstatement of canopy to portico

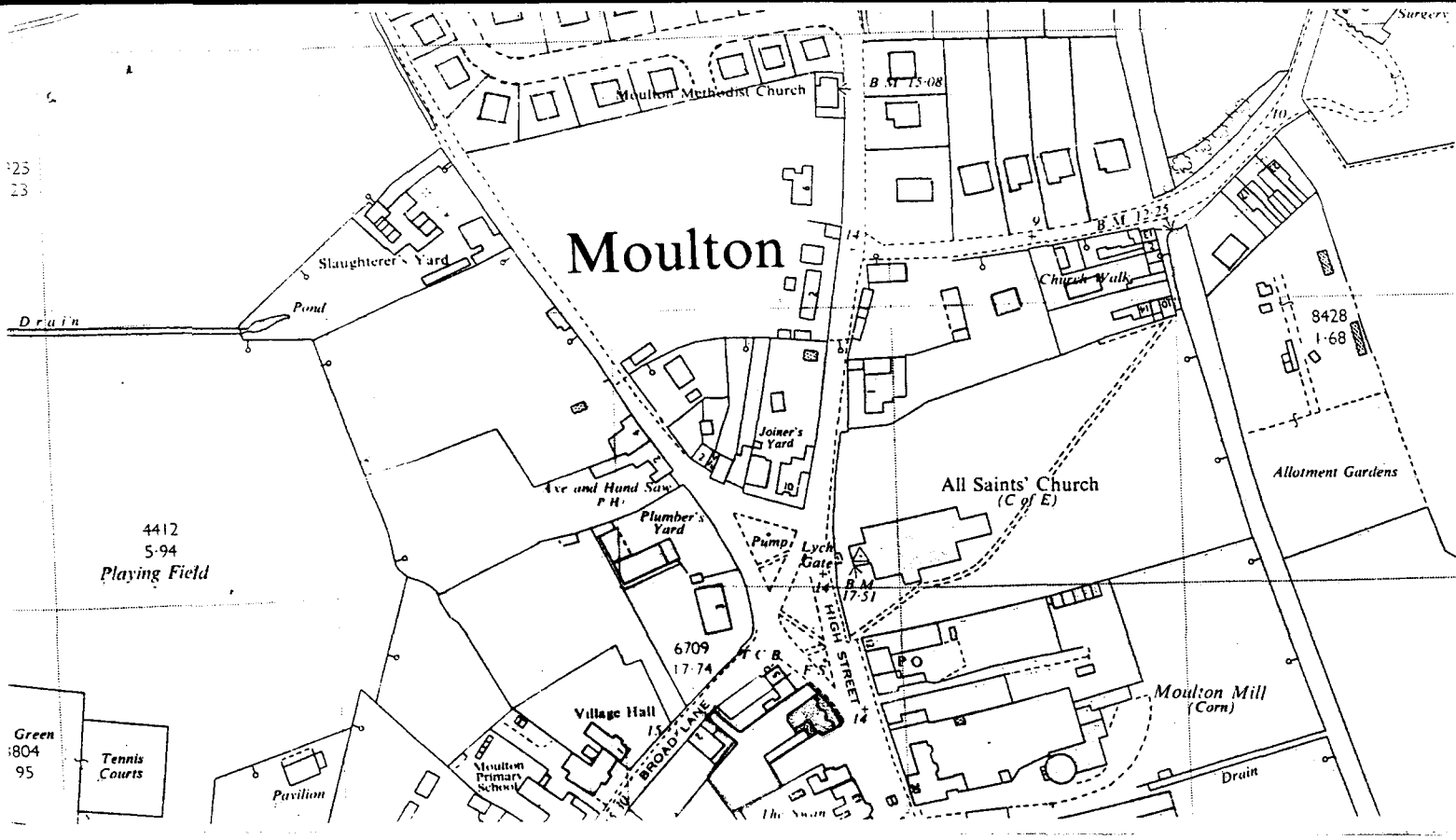



JAN 2001
Ref: H13/0050/01

TF 32 SW MOULTON HIGH STREET