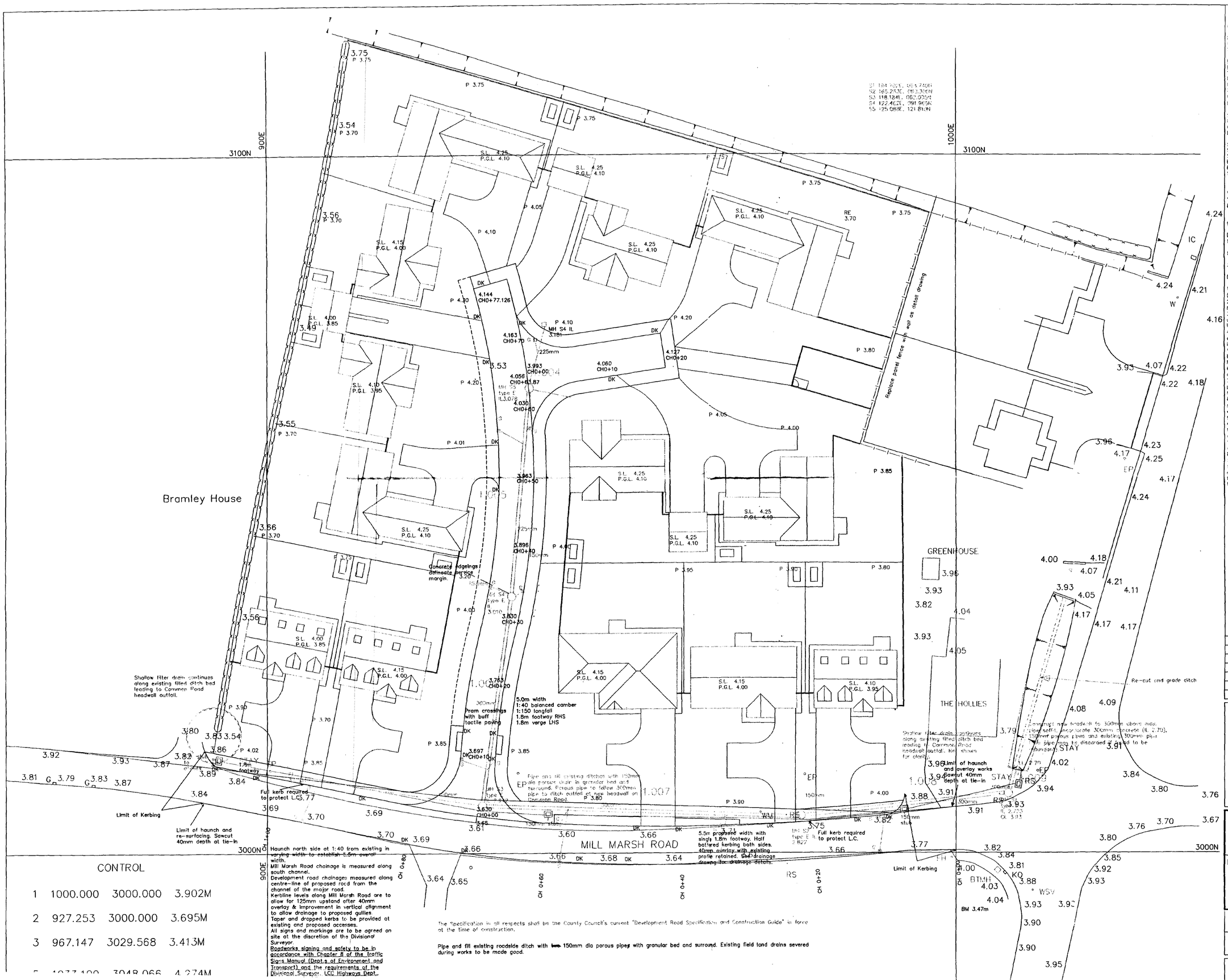

CONTROL

1	1000.000	3000.000	3.902M
2	927.253	3000.000	3.695M
3	967.147	3029.568	3.413M
5	1077.100	3048.066	4.274M

Haunch north side at 1:40 from existing in varying width to establish 5.5m overall width.
Mill Marsh Road chainage is measured along south channel.
Development road chainages measured along centre-line of proposed road from the channel of the major road.
Kerbline levels along Mill Marsh Road are to allow for 125mm upstand after 40mm overlay & improvement in vertical alignment to allow drainage to proposed gullies.
Taper and dropped kerbs to be provided at existing and proposed accesses.
All signs and markings are to be agreed on site at the discretion of the Divisional Surveyor.
Roadworks signing and safety to be in accordance with Chapter 8 of the Traffic Signs Manual (Dept.s of Environment and Transport) and the requirements of the Divisional Surveyor, LCC Highways Dept.

The Specification in all respects shall be the County Council's current "Development Road Specification and Construction Guide" in force at the time of construction.

Pipe and fill existing roadside ditch with ~~two~~ 150mm dia porous pipes with granular bed and surround. Existing field land drains severed during works to be made good.

DRAINAGE:

Existing
Foul water sewer
Surface water sewer

Proposed
Foul water sewer
Surface water sewer
Backdrop
Foul water drain
Surface water drain
Insp. chamber (traditional)
Preformed insp. ch. (depth 1m or less)
" " " (depth 600mm or less)
Shallow access chamber
Rodding eye
Chamber invert level
Road gully
Trapped gully in driveway
Suspended slab
Slab level
Soakaway
Design level
Rain water pipe
Sewer vent pipe
" " " via 'Durgo' valve
" " " at head of system
W/C
Sink
Back inlet gully (roddable)

CHAMBER SIZES

Depth to invert	Min. Int. Chamber Size
1.0m or less	450x450 (depth<0.9m use preformed)
1.5m or less	1200x750 or 1050 dia
>1.5m	1200x750 or 1200 dia

NOTES:

1). Works to comply with the Building Regulations 1991 (ammended 1992).
2). Road gully connections to be 150mm dia. clayware pipes.
3). Private drain connections to adoptable sewers to be clayware pipes. Remaining private drains to be 110mm dia. U.P.V.C. or clayware unless otherwise stated.
4). All pipe chambers and fittings to be installed, bedded and backfilled in accordance with the manufacturer's instructions.
5). Private drains and sewers which pass adjacent to building foundations to be constructed in accordance with Part H.1. of the Building Regulations.
6). All private drains to incorporate preformed inspection and shallow access chambers where possible.
7). Traditional private chambers to be constructed using pre-cast concrete sections with 150mm concrete surround.
8). Rainwater downpipes to be connected directly to surface water drain via 68/110mm adapters, removable to allow for rodding.
9). Position of yard gullies shown in garage drives are nominal only and may be adjusted on site.
10). All existing land drains encountered during construction to be conected to surface water system.
11). All drains in the vicinity of proposed trees to be constructed in accordance with the requirements of N.H.B.C. Practice Note 3.
12). All back inlet gullies to be roddable.
13). Where 'Durgo' valves are used they should not adversely affect the amount of ventilation necessary for the below ground system which is normally provided by the open stacks of the sanitary pipework.

Ref: 1144/99

Date :	Description :
R E V I S I O N S	

ALLISON HOMES

Swallow House, Banbury Close, West Elloe Avenue, Spalding, Lincs. PE11 2BS
Telephone : (01775) 724701 Fax : (01775) 762153
ALLISON HOMES is a trading name of SWALLOW HOMES LTD

Project :
PROPOSED DEVELOPMENT
MILL MARSH ROAD
MOULTON SEAS END

Drawing Title :
ADOPTABLE ROADS & SEWERS

Reference No :	Scales : 1:250
	Date : 16/11/98
Drawing No : L118/08	Drawn: DEM

Do not scale directly from this drawing. All discrepancies to be brought to the attention of the above office.

RE
3.70

Bramley House
Mr. & Mrs Crossland,
Bramley House,
Mill Marsh Road,
Moulton Seas End,
Spalding, Lincs.

GREENHOUSE

Mr & Mrs R. Drew,
The Hollies,
Mill Marsh Road,
Moulton Seas End,
Spalding, Lincs.

THE HOLLIES

Highway Boundary. Hatched area requires maintenance as grassed area only by adjacent plot owner.

EXISTING HIGHWAY BOUNDARY

(Area to be transferred from Swallow Homes Ltd shown shaded green)

MILL MARSH ROAD

KO

BM 3.47m

Date : Description :

R E V I S I O N S

ALLISON HOMES

Swallow House, Banbury Close, West Elloe Avenue, Spalding, Lincs. PE11 2BS
Telephone : (01775) 724781 Fax : (01775) 762153

ALLISON HOMES is a trading name of SWALLOW HOMES LTD

Project :
PROPOSED DEVELOPMENT
MILL MARSH ROAD
MOULTON SEAS END

Drawing Title :

SECTION 38 AGREEMENT

Reference No :

Drawing No :

Scales : 1:250

Date : 16/11/98

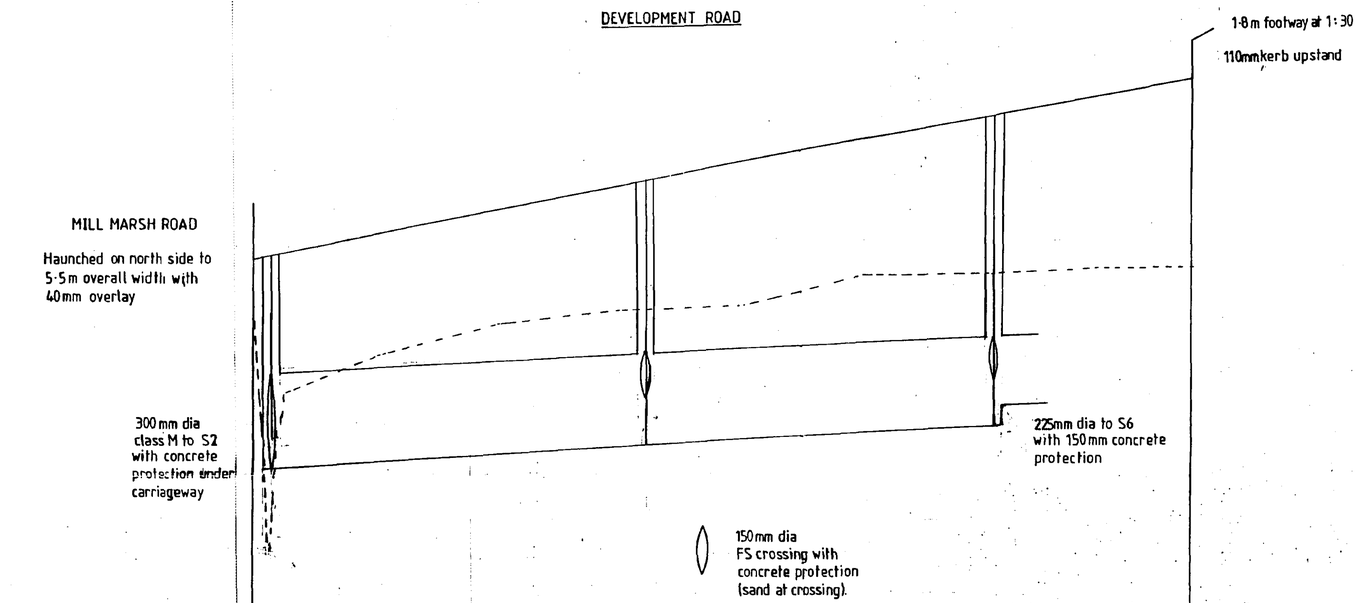
DEVELOPMENT ROAD
1·8m footway at 1:30
110mm kerb upstand
MILL MARSH ROAD
Haunched on north side to 5·5m overall width with 40mm overlay
300mm dia class M to S2 with concrete protection under carriageway
225mm dia to S6 with 150mm concrete protection
150mm dia FS crossing with concrete protection (sand at crossing).
C.L. ROAD 2
2·0m AOD.

| | | |

TYPE B MANHOLE

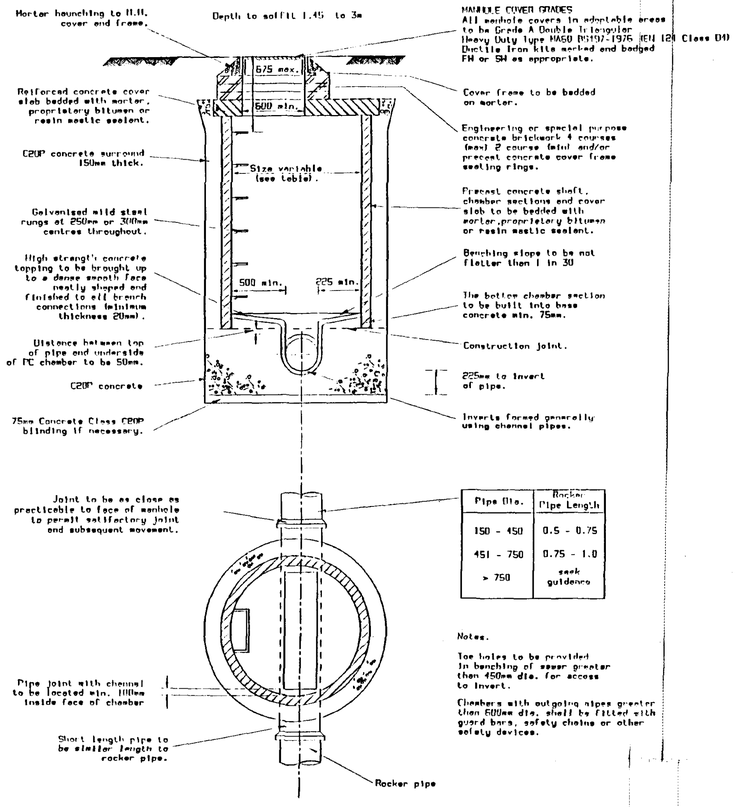

Pipe Dia.	Rocker Pipe Length
150 - 450	0.5 - 0.75
451 - 750	0.75 - 1.0
> 750	seek guidance

Notes.

Toe holes to be provided in benching of sewer greater than 450mm dia. for access to invert.

Chambers with outgoing pipes greater than 600mm dia. shall be fitted with guard bars, safety chains or other safety devices.

NOTES:-

TRENCH BACKFILL

1. Where the soffit of the Pipe is less than 0.5m below formation - Backfill to formation with Class E concrete.
2. Where the soffit of the Pipe is between 0.5m & 1.0m below formation - Backfill to formation with Type 1 Sub-base (allow for granular bedding material 150mm above crown of Pipe).
3. Where the soffit of the Pipe is greater than 1.0m below formation - backfill with suitable fill.

MANHOLE COVER GRADES
All manhole covers in adoptable areas to be Grade A Double Triangular Heavy Duty type HA60 BS497-1975 (EN 124 Class D4) Ductile iron kite marked and bedded FH or SH as appropriate.

TYPE E MANHOLE

Depth to soffit 1 to 1.45m

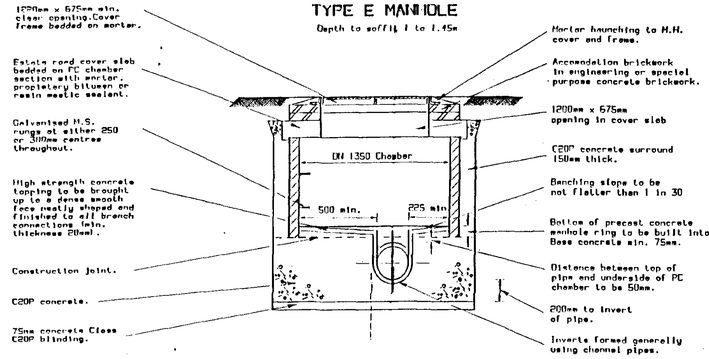

MANHOLE SCHEDULE FOR MINIMUM DIAMETER					
Diameter of largest pipe	Diameter of chamber	Diameter of largest pipe	Diameter of chamber	Diameter of largest pipe	Diameter of chamber
150	1200	450	1350	750	1800
225	1200	525	1500	825	1810
300	1200	600	1500	900 - 975	1960
375	1350	675	1500	> 975	2400

GENERAL NOTES:-
The details on this drawing are to comply with the Water Authorities Association Design Guide - Sewers For Adoption. Dated 1989, 4th Edition, Revision 1.

NOTES:-

1. The centre of any manhole is not necessarily co-incidental with the centre line of the main pipe.
2. Positioning of the manhole covers and step irons to be directed on site.
3. Construction joints in the concrete surround must not coincide with the joints in the precast concrete chamber rings.
4. The benching is to be formed to direct flow from side connections into the main flow.
5. Sulphate resisting cement is required in all concrete products used for Section 104 works on the site.
6. All lateral crossings to twin sewers shall be to the bedding and backfill standards described on the drawings, and protected as necessary. The high level sewer shall not be undermined by the low level lateral and connection. All end caps to laterals shall be painted 'F' or 'SH' as appropriate.

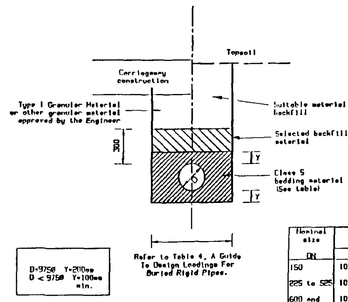

Class S Bedding
(Fm. - 2.2)

Nominal size	Pipe Bedding Requirement
DN	BM
150	10 or 14 nominal single size or 14 to 5 graded
225 to 525	10, 14 or 20 nominal single size or 14 to 5 graded or 14 to 5 graded
600 and above	10, 14, 20 or 40 nominal single size crushed rock or 14 to 5 graded or 20 to 5 graded or 40 to 5 graded

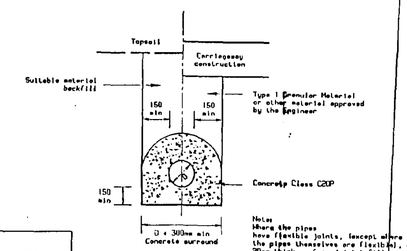

Concrete Bed and Surround
Gully Connections Only

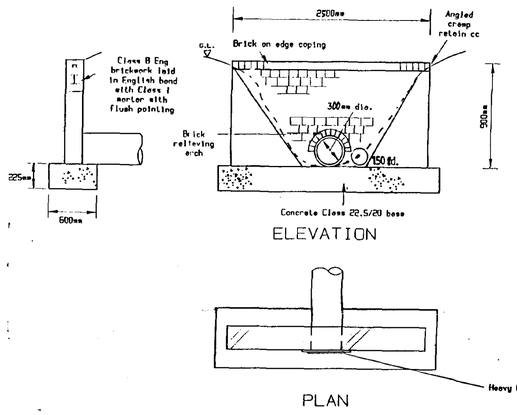

ELEVATION

PLAN

HEADWALL TO SWS OUTFALL (N.T.S.)

PLANNING
16 NOV 1999
1144/99

Date:	Description:
4/01/99	HEADWALL ADDED

REVISIONS

ALLISON HOMES
Swallow House, Banbury Close, West Elloe Avenue
Spalding, Lincs. PE11 2BS
Telephone (01775) 724701 Fax (01775) 762153
ALLISON HOMES is a trading name of SWALLOW HOMES LTD

Project: Proposed Development at Mill Marsh Road Moulton Seas End

Drawing Title: Drainage Details

Reference No:

Scales: NTS

Drawing No: L118/14/A1

Date: 04/01/99

Drawn: DEM

Revision:

Do not scale directly from this drawing

AW NOTES;
Refer to AW drg.no. 826/4 & subs.amd.
INTEX BOX. Developer to lay a 50mm dia duct through floor slabs of dwellings, and to lay service pipe to a point over AW main.

EME NOTES;
Developer to;
Install 38mm black service duct from meter box to main 450mm deep.
Road duct crossings 750mm deep, on and off site,
Excavate & re-instate within site.

Prop. LV U/G —— —— Bramley House
Prop. Service Cable ——— ———

BT NOTES;
Exchange Moulton MLK980403.
600mm min cover in carriageway, 450mm under accesses, 350mm under paths and verges.
Contact Development Liaison Officer 0800 212362.

BT 50mm PVC DUCT with 5pr cable extending to Distribution Point (UR).
BT 90mm PVC DUCT
DUCT TEE (arrow shows direction of rodding)
JOINT BOX

Private Service Entry Points
E • Electricity supply approx. entry point
W • Water supply approx. entry point
G • Gas entry point (No gas on this site)

WQ
Elec. Duct.
BT JOINT BOX
UR
BT 90mm PVC DUCT
90MDPE Water
BT 50mm PVC DUCT with 5pr cable extending to Distribution Point (UR).
RE 3.70
IC
ELECTRIC SUPPLY TO FOUL TREATMENT PLANT PUMP KIOSK
EP
GREENHOUSE
THE HOLLIES
STAY
Twin elec. ducts.
BT 90mm pvc duct
WM
PROP. DUCT CROSSING
BT SUPPLIED 90mm DUCT
SV
MILL MARSH ROAD
FH
BTMH
KO
WSV
BM 3.47m

The Specification in all respects shall be the County Council's current "Development Road Specification and Construction Guide" in force at the time of construction.

Ref: 1144/99

Date : Description :
R E V I S I O N S

ALLISON HOMES
Swallow House, Banbury Close, Wide Bloe Avenue, Spalding, Lincs. PE11 2BS
Telephone : (01775) 724781 Fax : (01775) 763153
ALLISON HOMES is a trading name of SWALLOW HOMES LTD

Project :
PROPOSED DEVELOPMENT
MILL MARSH ROAD
MOULTON SEAS END

Drawing Title :
PROPOSED SERVICES

Reference No :
Drawing No : L118/13
Scales : 1:250
Date : 16/11/98
Drawn: DEM

Do not scale directly from this drawing. All discrepancies to be brought to the attention of the above office.

STREET LIGHTING

Layout to BS 5489, Part 3, Cat 3.

Proposed 5m Street Lighting to Lincolnshire County Council Specification
LC 5/35/C/93 with REC supplies

All streetlights to have Type 'A' terminations as SD/14/4A

All columns to be sited within the adoptable highway and generally in compliance with appendix H of the current Lincolnshire Design Guide for Residential Areas

Columns shall not be installed within dropped kerb areas without prior agreement from the street lighting engineer.

Street Lighting to LCC Specification 5/35/C/93
and BS 5489, Part 3, Cat 3.

N
W E
S

Existing light mounted on E.P.

3100N
900E
1000E
3000N

6.Walcott
7.Aldeby
5.Aldeby
8.Walcott
4.Aldeby
3.Walcott
Bramley House
9.Eastcott
10.Pedwell
1.MortonV1
2.Morton V1
11.Douglas V2
12.Cairn V2
13.Morton V1
GREENHOUSE
THE HOLLIES
PANEL FENCE
RE 3.70
IC
W
EP
STAY
RS
WM
LC 1
LC 2
LC 3
LC 4
LC 5
LC 6
LC 7
Full kerb required to protect L.C.
MILL MARSH ROAD
FH
BTMH
KO
WSV
BM 3.47m

The Specification in all respects shall be the County Council's current "Development Road Specification and Construction Guide" in force at the time of construction.

SOUTH HOLLAND DC
HOUSING & PLANNING
16 NOV 1999
Ref: 1144/99

Date :	Description :	
19/03/99	LCs 2 & 3 relocated.Notes amended.	A3
06/01/99	Direct feed	A2
16/11/98	Base update	A1

R E V I S I O N S

ALLISON HOMES
Swallow House, Banbury Close, West Elloe Avenue, Spalding, Lincs. PE11 2BS
Telephone : (01775) 724781 Fax : (01775) 761153
ALLISON HOMES is a trading name of SWALLOW HOMES LTD

Project :
PROPOSED DEVELOPMENT
MILL MARSH ROAD
MOULTON SEAS END

Drawing Title :
STREET LIGHTING DESIGN

Reference No	Scales : 1:250
Drawing No. L118/12/A3	Date : 16/11/98
	Drawn: DEM

Do not scale directly from this drawing . All discrepancies to be brought to the attention of the above office.

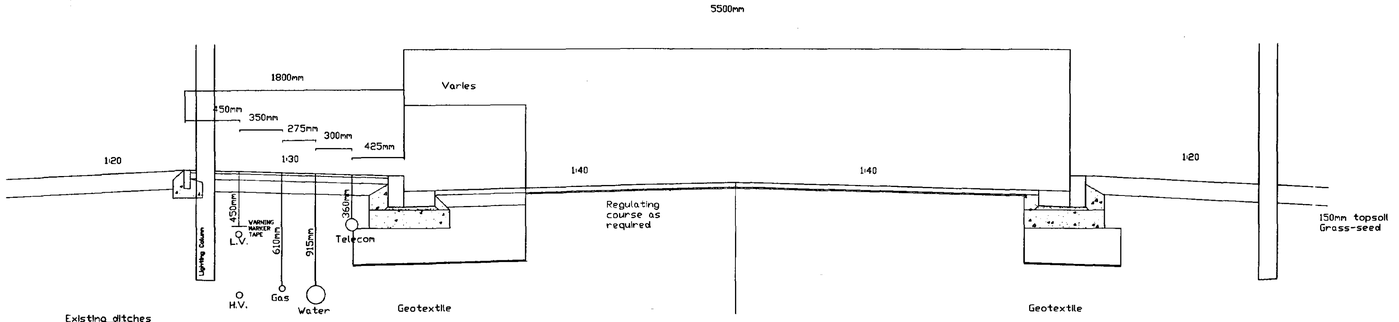

Existing ditches
Remove existing vegetation and unacceptable material. Pipe and FRI with two 150mm dia porous pipe with granular bed and surround

NOTE;
1. The footway depths shown will have to be increased where vehicle crossings are required.
2. No mains services or ducts are permitted within the construction thickness.

CARRIAGEWAY
Wearing course; 40mm thickness 10mm N.S. close graded bitumen to Cl. 11.3
Regulating course; as required
Basecourse; 100mm thickness 20mm N.S. DBM to Cl. 11.1
Sub-base; 450mm Type 1 aggregate to Cl. 10.1. Thickness 450mm for CBR<2%
Geotextile;

Half-battered pre-cast concrete kerbs 127x254 as Cl. 2.7
Pre-cast concrete channels 127x254 as Cl. 2.7

FOOTWAY
Wearing course; 25mm thickness of 6mm N.S. DBM to Cl. 11.4
Basecourse; 50mm thickness of 20mm N.S. DBM to Cl. 11.1
Sub-base; 100mm thickness of Type 1 aggregate to Cl. 10.1
Additional sub-base in vehicle crossings

Pre-cast concrete edgeing 50x127 as Cl. 2.1 with 110mm upstand.

Pram crossings to be provided with tactile paveing

Not to scale

Typical Cross-Section; Mill Marsh Road

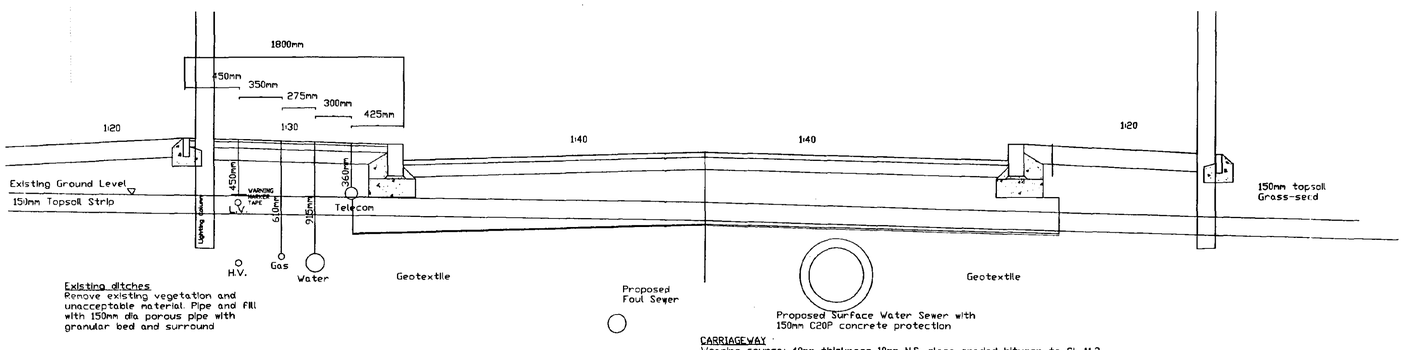

Existing ditches
Remove existing vegetation and unacceptable material. Pipe and fill with 150mm dia porous pipe with granular bed and surround

Proposed Foul Sewer

Proposed Surface Water Sewer with 150mm C20P concrete protection

NOTE;
1. The depths shown above will have to be increased where vehicle crossings are required.
2. No mains services or ducts are permitted within the construction thickness.
3. Where drainage pipes are within the carriageway construction a 150mm thick C20P concrete raft shall be constructed in accordance with para. 4.5.3 of Sewers for Adoption.

CARRIAGEWAY
Wearing course; 40mm thickness 10mm N.S. close graded bitumen to Cl. 11.3
Regulating course; as required
Basecourse; 100mm thickness 20mm N.S. DBM to Cl. 11.1
Sub-base; 450mm Type 1 aggregate to Cl. 10.1. Thickness 450mm for CBR<2%
Geotextile;

Half-battered pre-cast concrete kerbs 127x254 as Cl. 2.7
Pre-cast concrete channels 127x254 as Cl. 2.7

FOOTWAY
Wearing course; 25mm thickness of 6mm N.S. DBM to Cl. 11.4
Basecourse; 50mm thickness of 20mm N.S. DBM to Cl. 11.1
Sub-base; 100mm thickness of Type 1 aggregate to Cl. 10.1
Additional sub-base in vehicle crossings

Pre-cast concrete edgeing 50x127 as Cl. 2.1 with 110mm upstand.

Pram crossings to have tactile paving

Not to scale

Typical Cross-Section: Development Road

RECEIVED
HIGHWAYS DEVELOPMENT CONTROL
10 NOV 1999
Ref: 1144/99

Date :	Description :
15/02/99	Conc. edgings behind maint. strip

R E V I S I O N S

ALLISON HOMES
Swallow House, Banbury Close, West Elloe Avenue, Spalding, Lincs. PE11 2BS
Telephone : (01775) 724781 Fax : (01775) 762153
ALLISON HOMES is a trading name of SWALLOW HOMES LTD

Project :
Proposed Development at Mill Marsh Road Moulton Seas End

Drawing Title :
Typical Cross Sections Mill Marsh Road & Development Road

Reference No :	Scales : 1:25
	Date : 26/10/98
Drawing No : L118/05/A1	Drawn : DEM

Centre of Centre-line 97.5m Radius West Side
X = 838547.5180 Y = 3054835.1327

Centre of Centre-line 102.5m Radius East Side
X = 1032685.7440 Y = 3006769.0407

Centre of 7.5m Bellmouth Radius West Side
X = 920202.4365 Y = 3014632.3083
Tangent Points
X = 918628.4365 Y = 3007366.3083
X = 927944.3578 Y = 3014133.9588

Centre of 7.5m Bellmouth Radius East Side
X = 940325.7828 Y = 3011857.0239
Tangent Points
X = 932815.4365 Y = 3012262.3083
X = 939881.4797 Y = 3004370.1959

Tangent Points Approx CH 0+26
X = 930763.1754 Y = 3032003.7390
X = 933189.9032 Y = 3031402.9128
X = 935616.6310 Y = 3030802.0867

Turning Head
7.5m Radius Centre (North)
X = 943038.7646 Y = 3079976.5993
Tangent Points
X = 935772.8099 Y = 3078228.3500
X = 944129.9556 Y = 3072556.4038
X = 945894.3482 Y = 3060181.4320

7.5m Radius Centre (South)
X = 945894.3482 Y = 3060181.4320
Tangent Points
X = 938423.7264 Y = 3059809.3653
X = 944803.1572 Y = 3067601.6276

End of Head
X = 956942.0572 Y = 3074440.5119
X = 957305.7875 Y = 3071967.1134
X = 957669.5179 Y = 3069493.7149

End of Mainline
X = 929884.1073 Y = 3080962.2729
X = 932287.7017 Y = 3081649.8293
X = 934691.2962 Y = 3082337.3856

Centreline Intersection
X = 935057.3365 Y = 3068695.3248

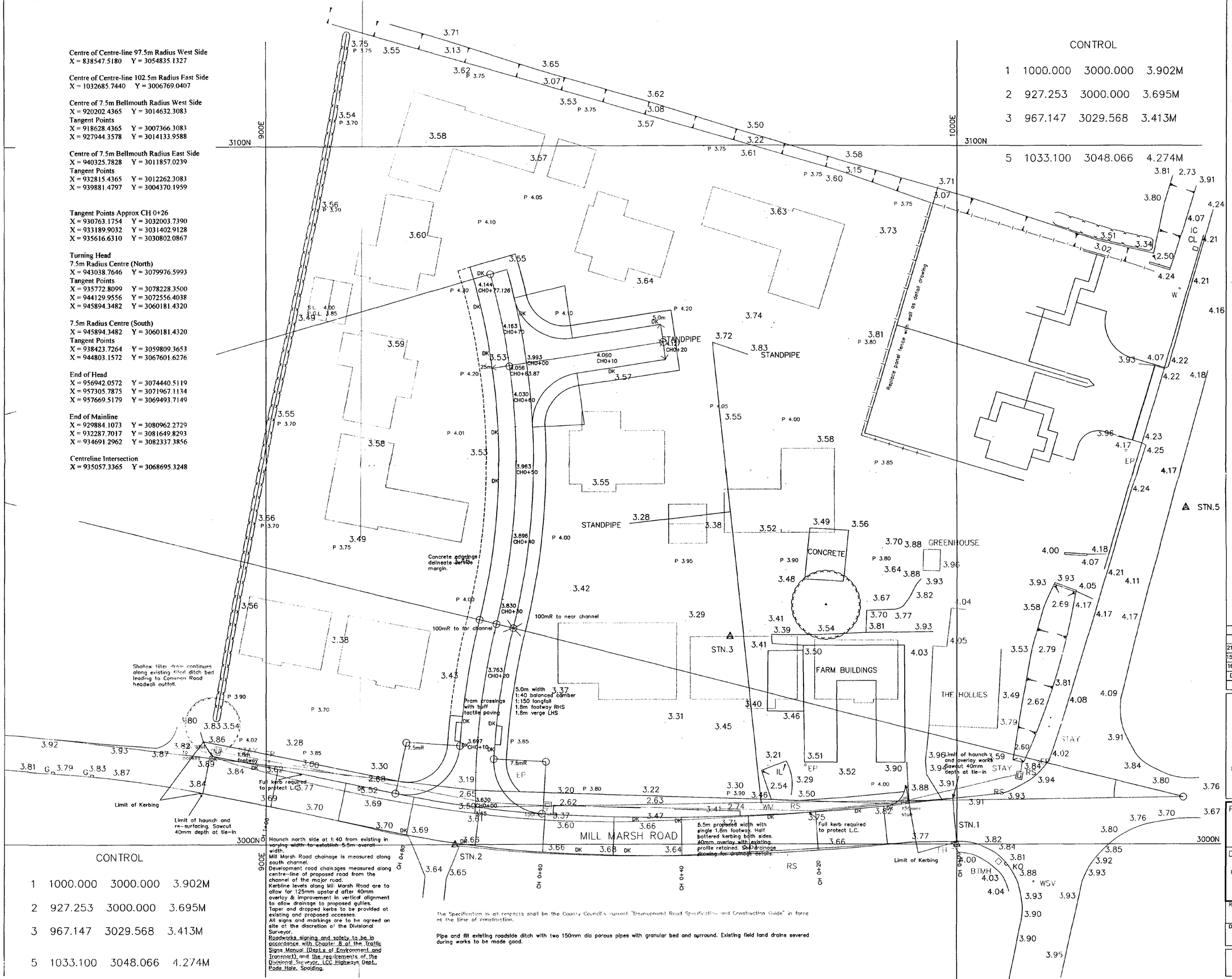

CONTROL

1	1000.000	3000.000	3.902M
2	927.253	3000.000	3.695M
3	967.147	3029.568	3.413M
5	1033.100	3048.066	4.274M

Haunch north side at 1:40 from existing in varying width to establish 5.5m overall width.
Mill Marsh Road chainage is measured along south channel.
Development road chainages measured along centre-line of proposed road from the channel of the major road.
Kerbline levels along Mill Marsh Road are to allow for 125mm upstand after 40mm overlay & improvement in vertical alignment to allow drainage to proposed gullies.
Taper and dropped kerbs to be provided at existing and proposed accesses.
All signs and markings are to be agreed on site at the discretion of the Divisional Surveyor.
Roadworks signing and safety to be in accordance with Chapter 8 of the Traffic Signs Manual (Dept.s of Environment and Transport) and the requirements of the Divisional Surveyor, LCC Highways Dept., Pode Hole, Spalding.

The Specification in all respects shall be the County Council's current "Development Road Specification and Construction Guide" in force at the time of construction.

Pipe and fill existing roadside ditch with two 150mm dia porous pipes with granular bed and surround. Existing field land drains severed during works to be made good.

CONTROL

1	1000.000	3000.000	3.902M
2	927.253	3000.000	3.695M
3	967.147	3029.568	3.413M
5	1033.100	3048.066	4.274M

Ref: 1144/99

Date :	Description :	
21/06/99	Co-ords altered	A3
15/02/99	General update	
16/11/98	includes Common Road	

R E V I S I O N S

ALLISON HOMES
Swallow House, Banbury Close, West Elloe Avenue, Spalding, Lincs. PE11 2BS
Telephone : (01775) 724701 Fax : (01775) 762153
ALLISON HOMES is a trading name of SWALLOW HOMES LTD

Project :
PROPOSED DEVELOPMENT
MILL MARSH ROAD
MOULTON SEAS END

Drawing Title :
ROAD SETTING OUT

Reference No :	Scales : 1:250
	Date : 16/11/98
Drawing No : L118/02/A3	Drawn: DEM

Do not scale directly from this drawing. All discrepancies to be brought to the attention of the above office.

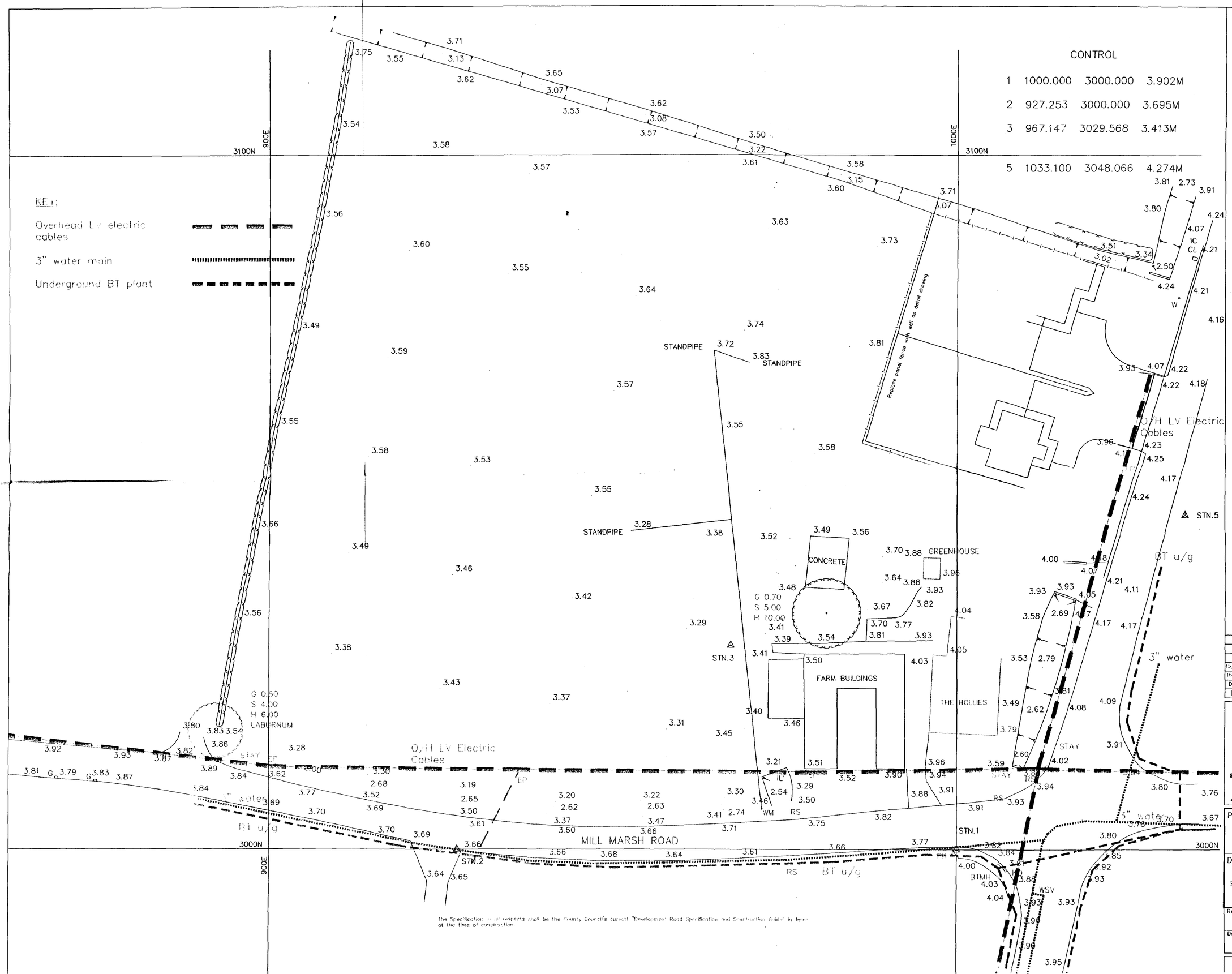

The Specification in all respects shall be the County Council's current "Development Road Specification and Construction Guide" in force at the time of construction.

Ref: 1144/99

Date :	Description :
15/02/99	General update
16/11/98	Includes Common Road

R E V I S I O N S

ALLISON HOMES

Swallow House, Banbury Close, West Elloe Avenue, Spalding, Lincs. PE11 2BS
Telephone : (01775) 724701 Fax : (01775) 762153

ALLISON HOMES is a trading name of SWALLOW HOMES LTD

Project :
PROPOSED DEVELOPMENT
MILL MARSH ROAD
MOULTON SEAS END

Drawing Title :
SITE SURVEY AND EXISTING SERVICES

Reference No :	Scales : 1:250
	Date : 16/11/98
Drawing No : L118/01/A2	Drawn: DEM

Do not scale directly from this drawing . All discrepancies to be brought to the attention