Kingspan Klargester

BIODISC®

HIGH PERFORMANCE SEWAGE TREATMENT PLANT FOR DOMESTIC APPLICATIONS

Let us help!
Free professional site visit with friendly support and advice.
helpingyou@klargester.com
to make the right decision
or call 01296 633033

Kingspan Environmental

BioDisc®

HIGH PERFORMANCE SEWAGE TREATMENT PLANT FOR DOMESTIC APPLICATIONS

For domestic dwellings without access to mains drainage, the Klargester BioDisc® provides a reliable, efficient and environmentally safe solution to your sewage disposal needs.

It is ideal for locations where discharge is to sub-surface irrigation, or to a suitable watercourse where approved by the Regulator, and where a septic tank will not meet the required standards.

CERTIFICATED TO EUROPEAN STANDARD EN-12566

In 2005, the Klargester BioDisc® underwent 40 weeks of stringent testing to assess its treatment efficiency to comply with the European Standard for small treatment plants.

After delivering exceptionally high levels of pollution removal (95%) under varying loads and conditions, the Klargester BioDisc® was awarded its Performance Certificate.

Only products that hold an EN-12566 certificate are approved for an exemption from a permit to discharge under the new EPP2 environmental legislation.

The test report also highlighted:

- Klargester BioDisc® operates without noise or odour
- Maintenance requirements are low with good access
- No technical or mechanical faults
- Low power consumption at 1.3kw/d – approx 10-14 pence per day*
- Low sludge build up and large storage capacity

** Applies to BA model BioDisc® – prices subject to local supplier.*

DESIGNED FOR QUALITY, RELIABILITY AND PEACE OF MIND

Klargester has pioneered the development of packaged treatment plant with many thousands of successful installations worldwide. The Klargester BioDisc® is robustly constructed from corrosion resistant materials, manufactured and performance tested in accordance with BS EN-12566.

Klargester is an accredited company under ISO 9001:2000 quality management systems. Klargester offer a range of alarm systems to alert the end user to mechanical failure. The installation of such, will be required under BS EN-12566.

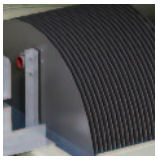

UNIQUE DESIGN

The Klargester BioDisc® is the only packaged sewage treatment plant utilising Rotating Biological Contactor technology for small domestic applications. This process offers inherent cost and performance benefits with a low carbon footprint.

ASSURED PERFORMANCE

During the EN-12566 certification testing, the Klargester gravity BioDisc® demonstrated an efficiency rating equivalent to a performance of 8mg/l BOD, 13mg/l SS and 4mg/l Ammonia.

Get in touch for a **FREE** professional site visit and a representative will contact you within 5 working days to arrange a visit.

helpingyou@klargester.com to make the right decision or call **01296 633033**

This certificated performance was based on the BioDisc® being correctly sized and maintained.

LOW RUNNING COSTS

Klargester BioDisc® has very low running costs. An important design feature of BioDisc® is the drive motor which runs virtually silently, has low power consumption and a significantly greater design life expectancy than a typical compressor.

The robust design of the drive motor means that there is minimal fall-off in performance as the component ages.

LOW LIFETIME COSTS

Lowest running costs combined with the quality and durability of the equipment – particularly the drive motor which has a considerably longer service life than the pumps and blowers fitted to competitive units – all add up to a significantly lower lifetime cost for the Klargester BioDisc®.

PROCESS STABILITY

The Klargester BioDisc® is recognised for its process performance. This is further enhanced by it's unique Managed Flow System, which ensures optimum performance by smoothing peak flows and buffering biological loads over the whole working day.

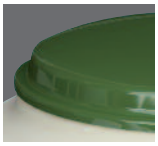

LOW PROFILE COVERS

Access for service and maintenance is provided via a durable cover at ground level.

EPP2 Certificated Products

ask.klargester.com

DISPERSAL

Subject to relevant authorities consent and site conditions, the plant discharge can be a watercourse or to a drainage field.

STANDARD INVERT OPTIONS

Three standard drain invert level options are available from stock to match the site topography and where applicable, minimise the excavation depth. The Klargester BA, BA-X and BB BioDisc® are available with an integral pump to move effluent from point of treatment if site level demands.

NATIONWIDE AVAILABLITY

Klargester products can be sourced from your local builders merchant or through local pollution control specialists.

HOW THE KLARGESTER BIODISC® WORKS

Central to the operation of each Klargester BioDisc® is the Rotating Biological Contactor (RBC), which supports a biologically active film or biomass on to which aerobic micro-organisms, naturally found in sewage, become established. Natural breakdown of sewage can then occur as described below.

THE BREAKDOWN PROCESS

Wastewater and sewage flows into the primary settlement zone 1 where solids are settled out and retained.
This accumulated sludge should be drawn out periodically.

Partially clarified liquor containing fine suspended solids flows upwards into the first stage Biozone 2 for breaking down by micro-organisms on the RBC. Suspended solids return to the primary settlement zone and the liquor is transferred to the second stage Biozone 3 for further treatment.

Any solids remaining are settled out in the final settlement tank 4. The resulting very high quality effluent can be discharged to a watercourse.

ROTATING BIOLOGICAL CONTACTOR (RBC)

The RBC comprises banks of vacuum formed polypropylene media supported by a steel shaft. This is slowly rotated by a low energy consumption electric motor and drive assembly.

Note: *The Klargester BioDisc® is designed to deal with normal domestic sewage. If the sewage is likely to contain unusual substances, please consult Klargester.*

BioDisc®

HIGH PERFORMANCE SEWAGE TREATMENT PLANT FOR DOMESTIC APPLICATIONS

UNIT SIZE	SINGLE HOUSE		MULTIPLE HOUSES	
	BA	BA-X	BB	BC
POPULATION EQUIVALENT	1 HOUSE, UP TO 4 BEDROOMS	1 HOUSE UP TO 7 BEDROOMS	2 HOUSES UP TO 8 BEDROOMS	3 HOUSES UP TO 12 BEDROOMS
OVERALL DIAMETER / WIDTH (A) mm	1995	1995	1995	2450
STANDARD DRAIN INVERT INLET (B) mm	750*	750*	750*	600†
STANDARD OUTLET (C) mm	835	835	835	685
DEPTH FROM INVERT TO BASE (D) mm	1400	1400	1400	1820
PIPEWORK DIAMETER (mm)	110	110	110	110
SLUDGE STORAGE PERIOD (APPROX)	12 MONTHS	9 MONTHS	6 MONTHS	7 MONTHS
STANDARD POWER SUPPLY	SINGLE PHASE	SINGLE PHASE	SINGLE PHASE	SINGLE PHASE
MOTOR RATING	50W	50W	50W	75W
WEIGHT (TONNES) STANDARD UNITS	0.388	0.418	0.418	0.650

Applications which include waste disposal units will require special sizing. Please consult Klargester.

* *Optional invert depths of 450mm and 1250mm are available.* † *Optional invert depth of 1100mm is available.*

** *Optional integral pump available in BA, BA-X and BB models*

BIODISC® BA, BA-X, BB AND BC

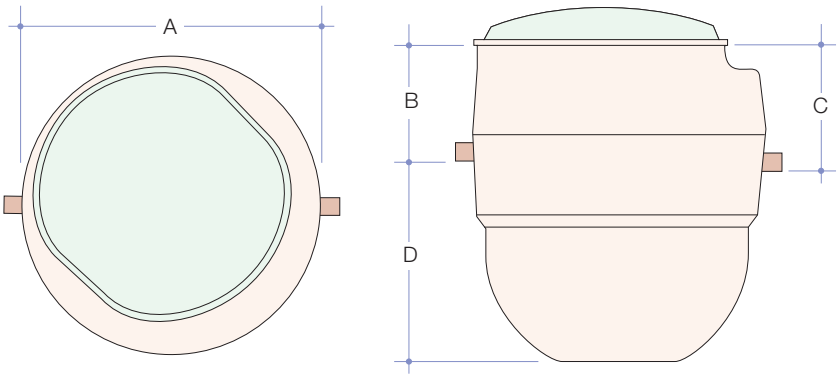

SIZING YOUR TREATMENT PLANT

The above table is a general guide to selecting the correct Klargester BioDisc® for your property but, with many variables to consider, it is essential to obtain an accurate assessment.

We are pleased to offer professional advice by adhering to British Water's sizing criteria published in their guidance booklet '*Flows and Loads*'. By following this best-practice, Klargester will ensure you are installing the most suitable BioDisc® model to serve your needs.

HIAB OFF-LOADING

Klargester can provide on-site mechanical off-loading if required (subject to location), please enquire.

QUICK AND EASY TO INSTALL

Supplied as a complete palletised unit with lifting and lowering fixings, the Klargester BioDisc® is ready for installation on a suitably prepared site.

Full installation details are provided in our comprehensive user instructions. Additional technical information sheets are available, covering the BioDisc® process, siting, installation, effluent disposal and other specific topics. Please contact Klargester for further information.

GROUND CONDITIONS

BioDisc® is suitable for installation in both 'wet' or 'dry' ground conditions. On 'wet sites' (where the water table is above the bottom of the tank excavation, or the area is liable to flooding), the BioDisc® should be mounted and backfilled with concrete.

For 'dry sites' (where the soil is free-draining and groundwater lies below the excavation), the unit can be backfilled with pea-shingle or equivalent.

ACCREDITED INSTALLER NETWORK

We can provide an installation service through our network of Accredited Installers.

Kingspan Klargester Accredited Installer

Located across the UK, these drainage professionals will ensure correct installation of your wastewater system.

Full details and contacts are available on our website: www.klargester.com/installers

COMPLETE MONITORING AND CONTROL

Klargester's high-tech control panel features an alarm and digital read-out display, providing the homeowner with an immediate alert should any problem occur.

The control panel 1 is able to communicate the nature of any fault, including loss of disc rotation*, pump failure*, or power failure. The display will inform the householder, or maintenance representative on site via a digital display and fault code. The system also features a highly visible external beacon 2 (optional) as a primary warning. The control panel has a facility for telemetry to be fitted (supplied by others) to enable remote fault diagnosis by service engineer.

Alarms are now required for sewage treatment plants in the event of a power failure. EN 12566-3 Section 6.0 para 6.1.1 states:

> *"Plants shall be provided with an alarm to indicate operational failure (for example electrical, mechanical or hydraulic failure). The manufacturer shall indicate which kind of failure is detected with the alarm."*

The new control and alarm panels offer a range of features and benefits including:

- Digital display with fault code to speed up fault diagnosis
- Rapid wiring installation
- Facility for optional telemetry to be fitted
- Flasher beacon available if required (optional)

SAMPLE CHAMBERS

When a treatment plant discharges into a watercourse, it is a regulatory requirement to have a sampling point so that the effluent quality can be periodically checked by regulatory bodies.

Available to suit all outlet depths of our standard ranges, a Klargester sample chamber provides the solution, enabling both quick installation and easy access for accurate and convenient effluent testing.

CONTROL PANEL AND EXTERNAL BEACON

SAMPLE CHAMBERS

** Optional sensor fitments.*

Like any mechanical device, BioDisc® requires a level of care and maintenance to deliver optimum performance and a lifetime of service. But once your system is installed and operating, its continual operation is something you probably won't want to think about.

That's where we can help too.

The BioDisc® Bond is an extended warranty package designed to give you total peace of mind. For a fixed monthly fee our in-house service division will monitor and maintain your unit through regular maintenance inspections.

We take care of it all: scheduled servicing, annual inspection, alarm call-outs… and in the unlikely situation that parts need replacing, then we cover that too – all at no additional cost.

For full details simply give us a call, or discover more online at:

www.klargester.com/bond

ENJOY TOTAL CARE WITH THE BIODISC® BOND

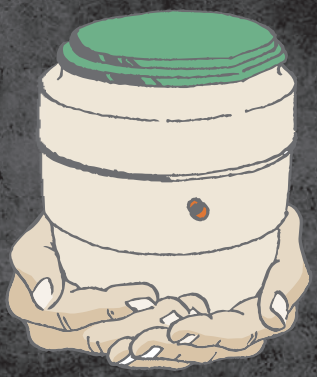

BIODISC® 10 YEAR WARRANTY

Reed Beds

NATURAL FILTRATION PROCESS

"What is a reed bed?", you may ask.

A reed bed is a filtration process used in conjunction with a Klargester BioDisc® treatment plant to further enhance the quality of the effluent migrating into a drainage field or surrounding watercourse.

DESIGN

- Advanced Patented design delivers superior performance
- Pre-fabricated to ensure correct sizing
- Modules designed with a hydraulic gradient across the length of the units
- Performance tested in Germany to EN12566-3 in combination with a Part 3 plant
- Modular system comprising of:

  2 individual reed beds = Single house application

  4 individual reed beds = Two house application
- Adjustable outlet weir allows water level control
- One piece GRP moulding installed flush to the ground
- Reeds and GRP beds supplied. Washed pea gravel, 'growing' media by others (not included)
- Effluent discharge is typically improved by at least 50%, providing reduced BOD and suspended solids
- Provides rooting zone depth of 600mm (required by Phragmites Australis)

BENEFITS

- Tertiary treatment for new applications with tight discharge consents
- Satisfies new building regulations
- Improved effluent quality for existing works
- Very low maintenance
- Aesthetically pleasing and environmentally friendly
- Easy to install and maintain
- Significantly improves discharge after a treatment plant

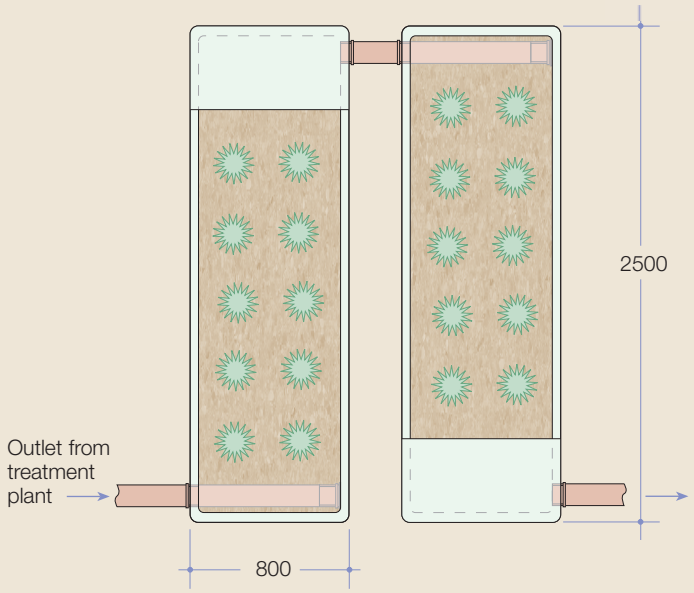

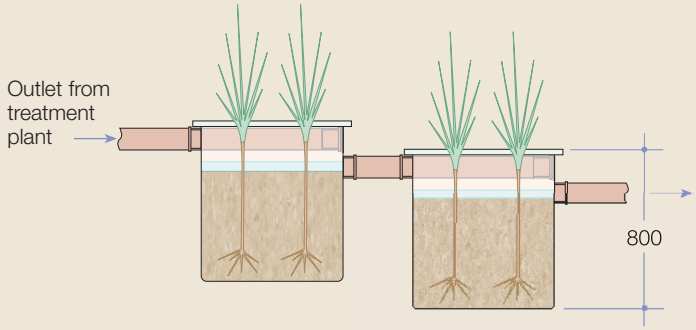

REED BED	HRB006	HRB012
POPULATION EQUIVALENT	6	12*
LENGTH (mm)	2500	2500
WIDTH (mm)	800	800
DEPTH (mm)	800	800
NO. REQUIRED	2	4
OUTLET SIZE (mm)	110	110

**12 population equivalent maximum*

PROFESSIONAL INSTALLERS

Klargester Accredited Installers

Experience shows that correct installation is a prerequisite for the long-lasting and successful operation of any wastewater treatment product. This is why using an installer with the experience and expertise to install your product is highly recommended.

Services include :

- Site survey to establish ground conditions and soil types
- Advice on system design and product selection
- Assistance on gaining environmental consents and building approvals
- Tank and drainage system installation
- Connection to discharge point and electrical networks
- Waste emptying and disposal

Discover more about the Accredited Installers and locate your local expert online.

www.klargester.com/installers

Kingspan Klargester Accredited Installer

CARE & MAINTENANCE

Kingspan Environmental Services

Who better to look after your treatment plant than the people who designed and built it?

Kingspan Environmental have a dedicated service division providing maintenance for wastewater products.

Factory trained engineers are available for site visits as part of a planned maintenance contract or on a one-off call out basis.

To find out more about protecting your investment and ensuring peace of mind, call us on:

0844 846 0500

or visit us online:
www.kingspanenvservice.com

Kingspan Environmental Services

Kingspan Klargester

DOMESTIC
SEWAGE SOLUTIONS

BIOTEC™
DOMESTIC SEWAGE TREATMENT PLANTS

HILLMASTER
PACKAGED PUMP STATIONS

REED BEDS

BETA+ & ALPHA
SEPTIC TANKS

BELOW GROUND STORAGE TANKS

Kingspan Water

RAINWATER
HARVESTING SOLUTIONS

INTEGRATED RAINWATER HARVESTING SYSTEMS

GARDEN WATERING SYSTEMS

Klargester

UK: College Road North, Aston Clinton, Aylesbury, Buckinghamshire HP22 5EW

Tel: +44 (0) 1296 633000 Fax: +44 (0) 1296 633001 Scottish Office: Tel: +44 (0) 1355 248484
email: info@klargester.com

Ireland: Unit 1a, Derryboy Road, Carnbane Business Park, Newry, Co. Down BT35 6QH

NI Tel : +44 (0) 28 302 66799 Fax: +44 (0) 28 302 60046 ROI Tel: 048 302 66799 Fax: 048 302 60046
email: info@klargester.ie

Visit our website **www.klargester.com**, or our company website **www.kingspanenv.com**

Follow us on:

@kingspanenv youtube.com/kingspanenvironment

Part of Kingspan Environmental

Certificate No. FM 563603

Certificate No. OHS 563604

BRITISH WATER

UK GREEN BUILDING COUNCIL Founding Member

MIX Paper from responsible sources FSC® C015655

In keeping with Company policy of continuing research and development and in order to offer our clients the most advanced products, Kingspan Environmental reserves the right to alter specifications and drawings without prior notice.

Issue No. 20: March 2013