

EAST

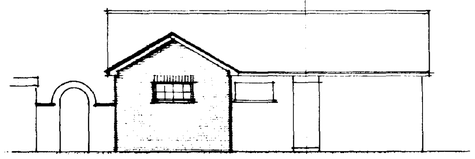

NORTH

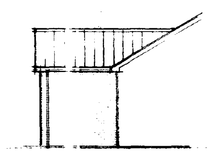

WEST

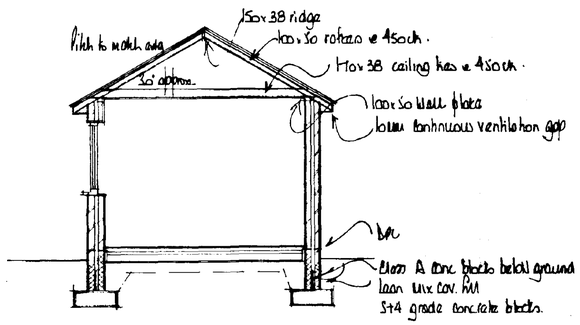

SECTION A - A

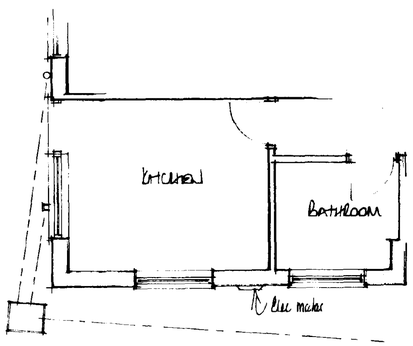

EXISTING
FLOOR PLAN

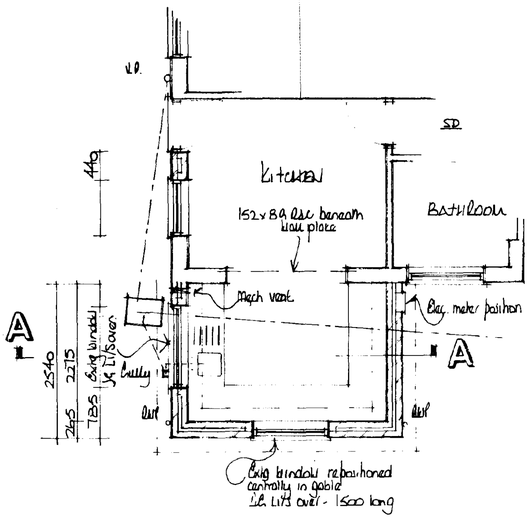

PROPOSED

FOUNDATIONS

Foundations to be ST4 grade concrete

For 265mm walls foundations to be 700 x 230mm

Foundations to be taken down to a firm loadbearing strata, a min. 1.0m if in shrinkable sub soil, in accordance with the requirements of the Local Authority Building Control Dept. and in accord with the NHBC guidelines for building near trees.
Site soil surveys are recommended in respect of foundations to establish specific site conditions before foundation work is undertaken.
Any investigation work relating to exstg foundations should be carried out prior to the commencement of any works.

FLOOR CONSTRUCTION

Ground
65mm sand/cement screed reinforced with chicken wire mesh
500g polythene separating membrane
50mm Jablite SD floor insulation (k = 0.037W/sq.m degree C)
100mm ST4 grade oversite concrete
1200g polythene damp proof membrane
25mm sand blinding
100mm compacted hard-core - if in excess of 100mm fill, to a max. 600mm, the hard-core is to be laid and compacted in layers not exceeding 150mm.
Strip off all vegetable soil beneath proposal

WALL CONSTRUCTION

Below Ground
To be 100mm Class A concrete blocks
Cavity to be filled to 225mm below lowest dpc level with lean mix concrete

Above Ground
To be 265mm o/a constructed as follows :-

100mm facing brick (to be FL quality below dpc level)
65 mineral wall insulation i.e. Dritherm (k = 0.036)
100mm loadbearing insulation blocks i.e. Hemelite (k = 0.037)

All to be tied together using stainless steel wall ties positioned at distance not exceeding 900mm horizontally, 450mm vertically and staggered. To be at every block course vertically at all returns and reveals.

Internal finish to be 12mm render with gypsum plaster skim finish to give a 'U' value of 0.414W/m²

DPC in Walls
To be a min 150mm above finished ground level
An insulating vertical cavity closer and dpc i.e. Thermabate, is to be provided to all cavity closures.
A dpc cavity tray, stepped as applicable, is to be constructed within the wall immediately above an at utment.

LINTELS

Lintels to be IG, or similar and equivalent, to have a min. 150mm end bearing and be installed in strict accordance with manufacturers instructions with a dpc cavity tray over where applicable

Lintels to be protected with min. 15mm gypsum plaster skim finish to give a min. half hour fire protection.

WINDOWS & DOORS

Windows and doors to be purpose made UPVC, double glazed with 12mm air gap to sealed units and weather stripped

Windows to habitable rooms are to incorporate a controllable trickle vent of 8000 sq mm..

Glazing to windows less than 800mm and doors (include sidelights to doors) less than 1500mm above floor level is to be laminated or toughened glass in accord with BS6206 : 1981.

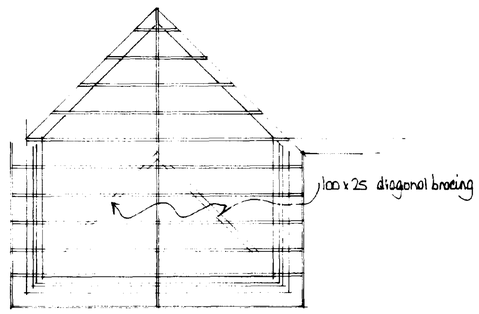

ROOF PLAN

VENTILATION

The kitchen is to be mechanically ventilated direct to the external air. The capacity of the extractor is to be 60 litres/sec or 30 litres/sec if in a cooker hood.

SMOKE DETECTION

Self contained smoke alarms complying with BS5446 : Pt 1 : 1990 are to be installed where indicated SD on the drawing. An alarm must be positioned within 3.0m of bedroom doors.

The alarms are to be permanently wired to a separately fixed circuit at the distribution board operating at a low voltage via a mains transformer.

The wiring installation is to comply with the I.E.E. Regulations.

ELECTRICAL INSTALLATION

The Electrical Contractor is to ensure that the electrical installation is in full compliance with the latest edition of the I.E.E. Regulations
Any electrical fitting indicated on the drawing in a position contravening these regulations must be relocated in order to achieve full compliance.

HOT WATER SYSTEM

A room thermostat or radiator valves are to be installed.

All pipes not contributing to useful heat requirements are to be insulated using an insulation material with a thermal conductivity not exceeding 0.45W/mk and a thickness equal to the external diameter of the pipe up to a max. of 40mm.

DRAINAGE

Surface
Excavate for and lay in where indicated 100mm diam. flexible jointed UPVC drains on 100mm pea gravel bed from 100mm diam. upturned bend at base of downpipe to surface water soakaway.

Form soakaway where indicated a min. 5.0m from the nearest building. Excavate 1200 x 1200 x 1200mm deep, backfill with brick rubble to 300mm below ground level, lay in sheet polythene and make up with compatable soil.

Foul

Excavate for and lay in where indicated 100mm diam. flexible jointed upvc drains on 100mm pea gravel bed at a gradient of 1 : 70.

Where 100mm diam. drains pass through walls they are to be protected by the use of a lintel over. Both sides the wall to be masked with rigid sheet material with 50mm clearance of the pipe.

Where 100mm diam. drains pass beneath the building they are to be exposed and inspected for damage, repaired if defective, and surrounded in 150mm pea gravel.

Install where indicated trapped gullies - waste pipes to discharge below grating level and above water level.

Install 40mm diam. pvc waste to sink with 75mm deep trap.
All waste pipes to have rodding access at each change of direction and be readily accessible throughout their length.

Above ground drainage to comply with BS5572 : 1978
Below ground drainage to comply with BS8301 : 1985

All drainage items are to be installed in strict accordance with the manufacturers instructions.

ROOF CONSTRUCTION

Tiles
The roof is to be covered with interlocking concrete roof tiles fixed in strict accordance with manufacturers instructions.

Battens
Approved quality tanalised s/w battens, 38 x 25mm, are to be laid at a gauge suitable for the tiles and fixed with 90 x 3.35mm wire nails. Battens should be at least 1.2m in length and should be of sufficient length to be supported at each end and intermediately by at least three rafters, trusses or walls. Butt joints over intermediate supports should be staggered and the ends must be sawn

Underlay
Approved reinforced roofing felt, type 1F to BS 747, is to be laid over the rafters lapped 150mm at the joins and secured with clout nails. The underlay should extend over the fascia board and into the eaves gutter. In order to prevent water traps behind the fascia it is recommended that a strip of 6mm marine plywood is provided to support the underlay. The ply is to be laid over the rafters and under the roofing felt positioned as close as possible to the last tiling batten and secured to the fascia.

Eaves
Eaves are to be formed with standard size tiles and purpose made eave fillers must be nailed to the fascia board. Eave tiles must be laid at the same pitch as the main body of tiling and should overhang the fascia by an amount sufficient to ensure that the water discharges into the centre of the gutter.

Verges
Verges are to be formed with 150mm wide asbestos cement strip onto which is bedded the tiles which form the verge projecting approx. 50mm over bargeboards or gable brickwork.

Ridge
The ridge is to be covered with segmental ridge tiles of the same colour as the main body of tiling, unless specified otherwise, and secured using a proprietary ventilated dry ridge system having ventilation equivalent to a continuous 6mm gap.

Valleys
Valleys are to be formed with Code 4 lead lining supported by boards with the adjacent tiling neatly cut and bedded onto plain tile slips leaving a clear channel approx. 125mm wide.

Mortar
All bedding mortar is to consist of 3 parts sharp sand to 1 part Portland cement and should be struck off to give a smooth face and pointed in one operation.

Insulation
To be Rockwool Rollbatts (k = 0.037 W/mK), 150mm laid between joists with a further layer of 80mm laid at right angles over the top.

Ceilings
12.7mm foil backed plasterboard, fixed in accordance with manuf. instructions with all necessary noggins etc, and finish with artex/skim finish in accordance with clients instructions.

Ventilation
Provide a 10mm continuous gap covered with insect proof gauze to the soffit to provide cross ventilation to the roof space.

Rainwater Goods
Supply and fix 103mm PVC gutters to fascias with all necessary brackets, stop ends, outlets etc

Supply and fix 64mm PVC downpipes securely clipped to walls at 1800mm cts with all necessary offsets, swannecks, adaptors etc and taken into 100mm diam. upturned bend at base.

STRAPPING

Where rafters, floor joist and ceiling ties run parallel to walls they are to be strapped at 1800mm cts. Straps to be fixed to a min. 3No. rafters etc., having nogged between beforehand, and hooked into the cavity a min. 150mm.
Similar straps to be used at 1800mm cts to hold down the wall plate.

Straps to be 30 x 6mm galv. m.s.

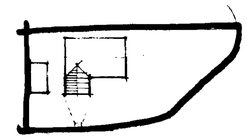

BLOCK PLAN

DETERMINED PLAN
SOUTH HOLLAND
16 DEC 1995
Ref: 1198/95

A		
	Date	Revisions

© copyright

East Midlands Design Associates
"Willow Lodge",
Horseshoe Road,
Spalding,
Lincs. PE11 3JA
Tel: Spalding (0775) 767968

Client
Mr S. Pacey & Miss D. Richardson

Job Title
Kitchen Extension at
1 Primrose Crescent
Pinchbeck
Spalding

Drawing Title
Plan,
Section
&
Elevation

Scale 1:50 , 1:100

Date Dec 95 Drawn by AL

Drg. No. 95/76/01 Rev.