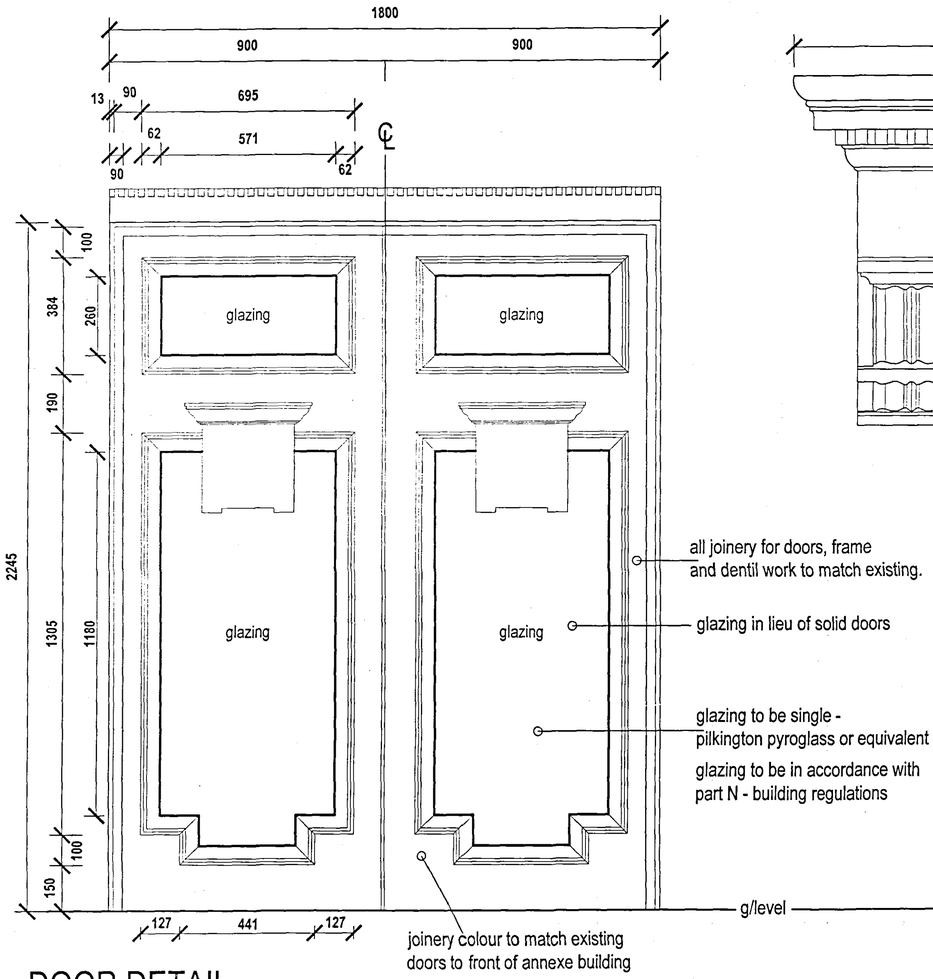

DOOR DETAIL

1:10 scale

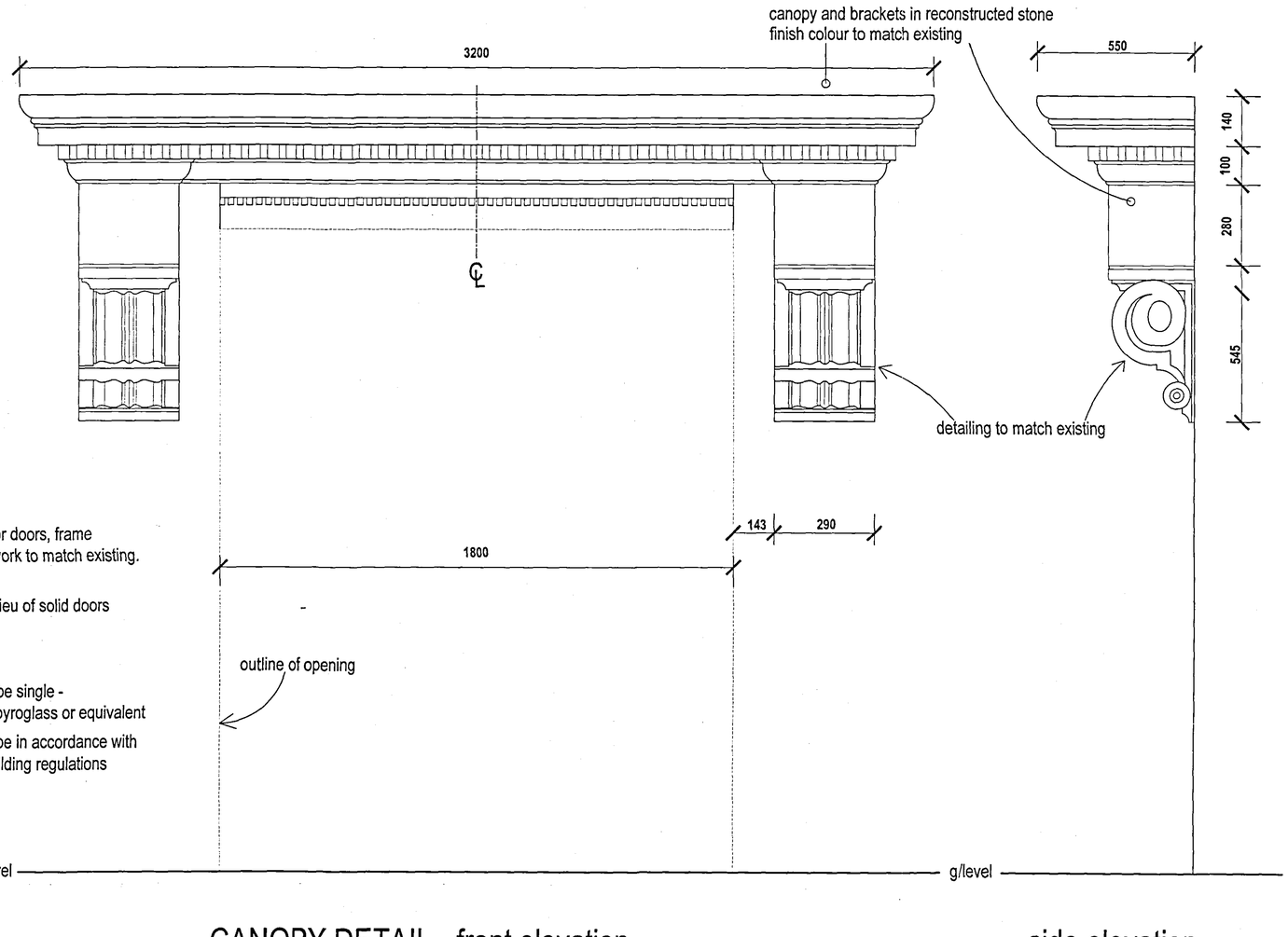

CANOPY DETAIL - front elevation

1:10 scale

side elevation

1:10 scale

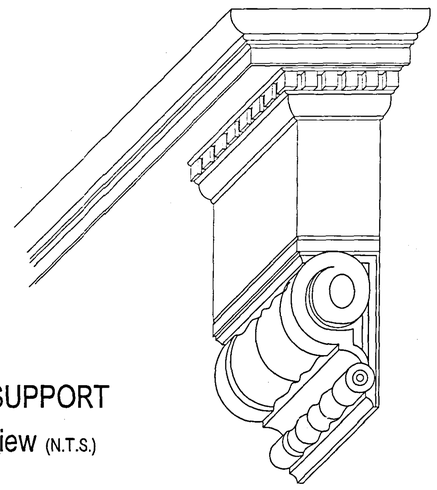

CANOPY SUPPORT

Isometric View (N.T.S.)

DETERMINED
PLAN

0405/06

DRAWING TO BE READ IN-CONJUNCTION
WITH DRAWING No SH2502/08 & SH2502/09

SOVEREIGN

Fulney Hall,
69 Holbeach Road
Spalding, Lincolnshire,
PE12 6ER

Tel : 01775 716716
Fax : 01775 716715

Website: www.sovereignhomes.co.uk

SITE REF.

CLEY HALL HOTEL - 22 HIGH STREET
SPALDING - LINCS - PE11 1TX

KINGS COUNTRY HOTELS

DRAWING

ALTERATIONS TO BUILDING TO FORM RECEPTION AREA
DETAILS OF NEW ENTRANCE DOOR AND FRAME

DRAWN	SCALE	DATE	DRG. NO
NM	1:10	MARCH 06	SH2502/10