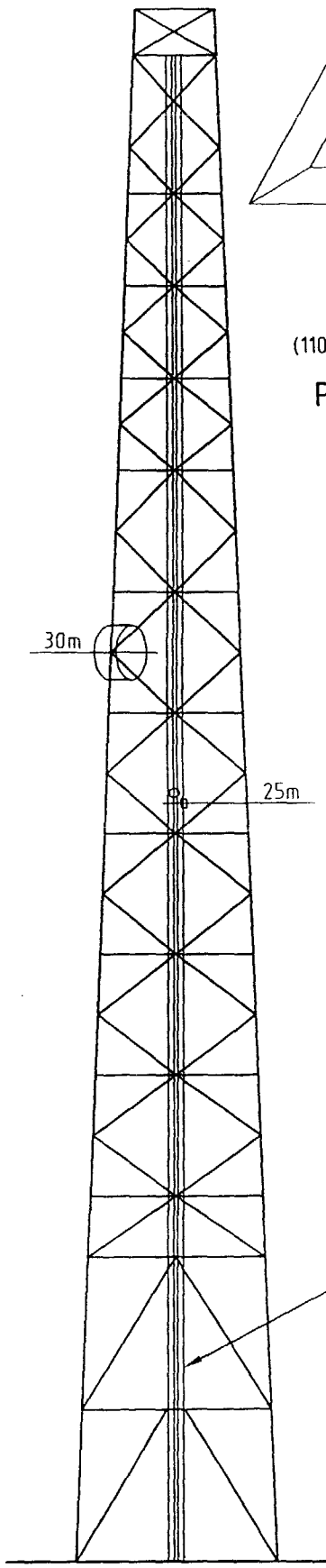

ELEVATION
(EXISTING ANTENNAE NOT SHOWN)

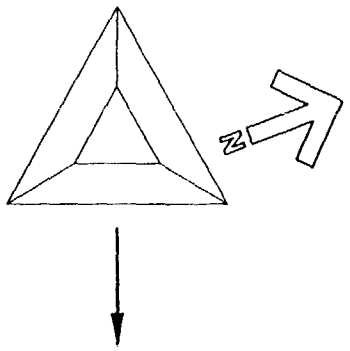

PLAN

PROPOSED POSITION FOR:
1.8m-13GHz. DISH ANTENNA
AT 30m & 228° E.G.N.
TO BASE STATION PET1R
(SUB-PROTECTED R.F. UNIT
MOUNTED AT GROUND)
IONICA ANTENNA REF. D2

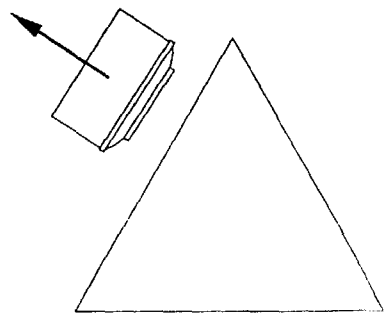

PLAN AT 30m
SCALE 1=100

PROPOSED POSITION FOR:
0.3m-38GHz. DISH ANTENNA
AT 25m & 301° E.G.N.
TO BASE STATION PET1Y
(NON-PROTECTED R.F. UNIT
MOUNTED WITH ANTENNA)
IONICA ANTENNA REF. D3

PROPOSED POSITION FOR:
0.3m-38GHz. DISH ANTENNA
AT 25m & 10° E.G.N.
TO BASE STATION PET1X
(NON-PROTECTED R.F. UNIT
MOUNTED WITH ANTENNA)
IONICA ANTENNA REF. D1

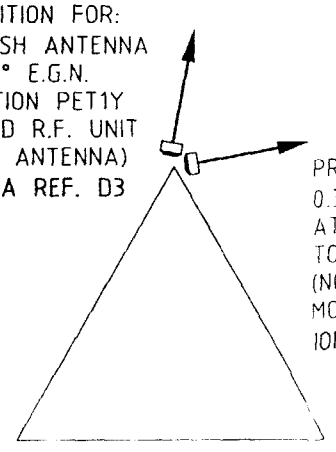

PLAN AT 25m
SCALE 1=100

FEEDERS TO BE FIXED TO
EXISTING SPINE AT 500 CTRS.

ANTENNA KEY

ANTENNA	SECTOR	TYPE/SIZE	BEARING E.G.N.	HEIGHT ℄ A.G.L.	REMOTE RFU
D1	-	38GHz/0.3m	10°	25000	NO
D2	-	13GHz/1.8m	228°	30000	YES
D3	-	38GHz/0.3m	301°	25000	NO

© 1994 NATIONAL TRANSCOMMUNICATIONS LIMITED
All rights reserved. No part of this publication may be reproduced, stored in a retrieval system or transmitted in any form or by any means (Electronic, Mechanical, Photocopying, Recording or otherwise), without the prior written consent of the Company.

NOTES

1. FOR SITE DRAWING LIST SEE DO.P0-00XXX.

IONICA DRAWING STATUS

FOR APPROVAL | APPROVED | AS BUILT

CLIENT IONICA

DWG. No. PER2K-022

DESIGN INFORMATION TAKEN FROM
IONICA SDD1 ISSUE 1.0 18/02/97

ISSUE	AMENDMENTS	APP'D	DATE
A	PROV ISSUE		23/04/97

NTL
National Transcommunications Limited
Network Services, Crawley Court, Winchester
Hampshire, SO21 2QA ENGLAND.

TITLE
SPALDING
TOWER SCHEMATIC
SHOWING IONICA
ANTENNA REQUIREMENTS

THIRD ANGLE PROJECTION AND
DIMENSIONS IN mm UNLESS STATED OTHERWISE

DRAWN	CHK'D	SCALE	
KW		1=200 USO	
S.R.G.	SITE No.	PROJ No.	BUS. TYPE
5315	00427	7EX003	STN

DRG No. DO.P4-01302 sh 1 of 1

MODS SINCE LAST ISSUE

CAD LOCATION V:\PROJECTS\7EX003\ION01237

A3

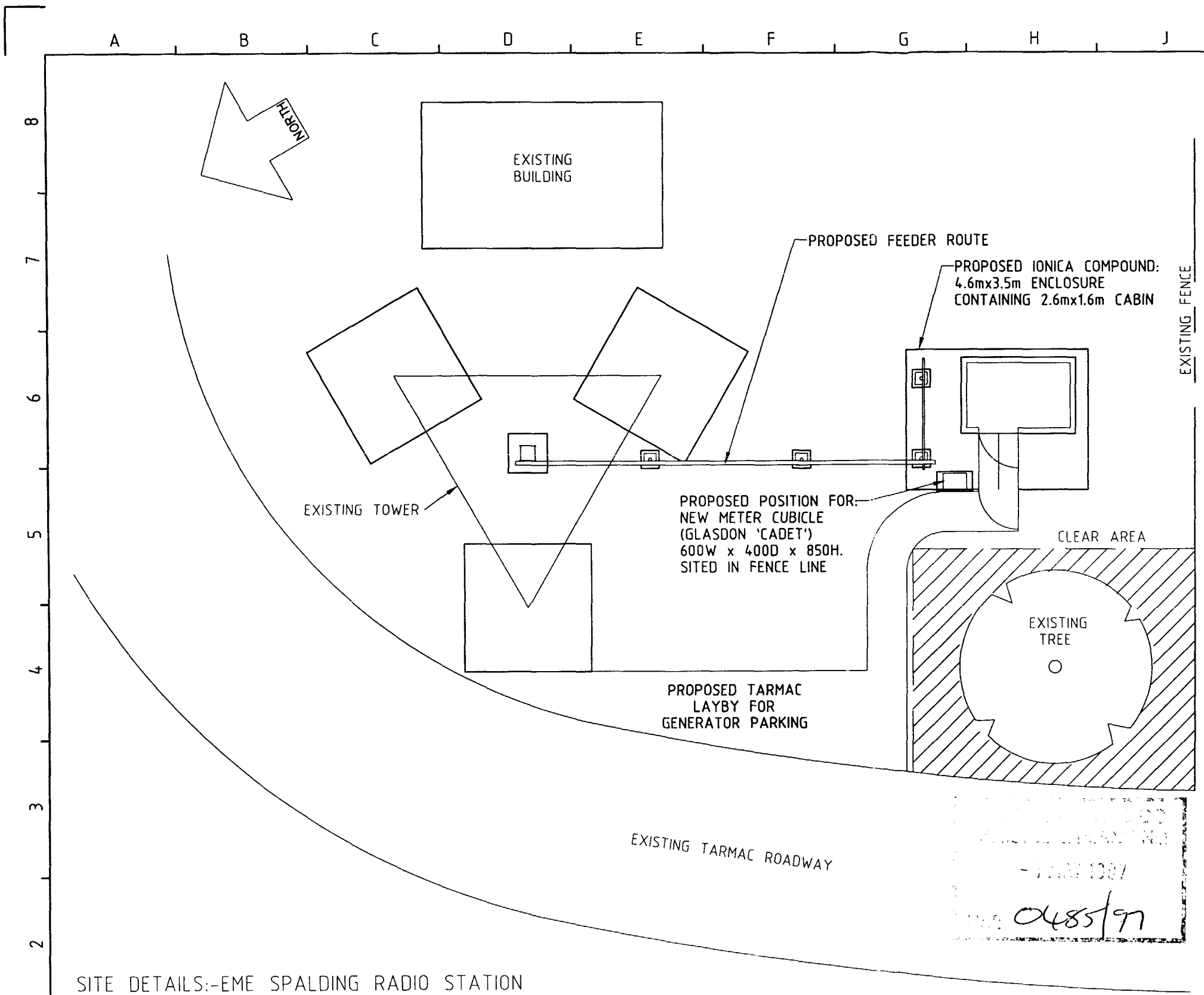

© 1994 NATIONAL TRANSCOMMUNICATIONS LIMITED
All rights reserved. No part of this publication may be reproduced, stored in a retrieval system or transmitted in any form or by any means (Electronic, Mechanical, Photocopying, Recording or otherwise), without the prior written consent of the Company.

NOTES

1. FOR SITE DRAWING LIST SEE DO.P0-00XXX.

IONICA DRAWING STATUS

FOR APPROVAL | APPROVED | AS BUILT

CLIENT IONICA

DWG. No. PER2K-021

ISSUE	AMENDMENTS	APP'D	DATE
B	PROV ISSUE		29/04/97
A	PROV ISSUE		22/04/97

NTL

National Transcommunications Limited
Network Services, Crawley Court, Winchester
Hampshire, SO21 2QA ENGLAND.

TITLE
SPALDING
SITE LAYOUT

THIRD ANGLE PROJECTION AND DIMENSIONS IN mm UNLESS STATED OTHERWISE

DRAWN	CHK'D	SCALE	
KW		1=100	
S.R.G.	SITE No.	PROJ No.	BUS. TYPE
8200	00427	7EX003	STN

DRG No. DO.P1-00510 sh 1 of 1

SITE DETAILS:-EME SPALDING RADIO STATION
SITE OWNER- EAST MIDLANDS ELECTRICITY
ADDRESS-CLAY LAKE LANE,
SPALDING,
LINCS.
O.S. GRID REF: TF 2540 2120

MODS SINCE LAST ISSUE

CAD LOCATION V:\PROJECTS\7EX003\ION01232

A3