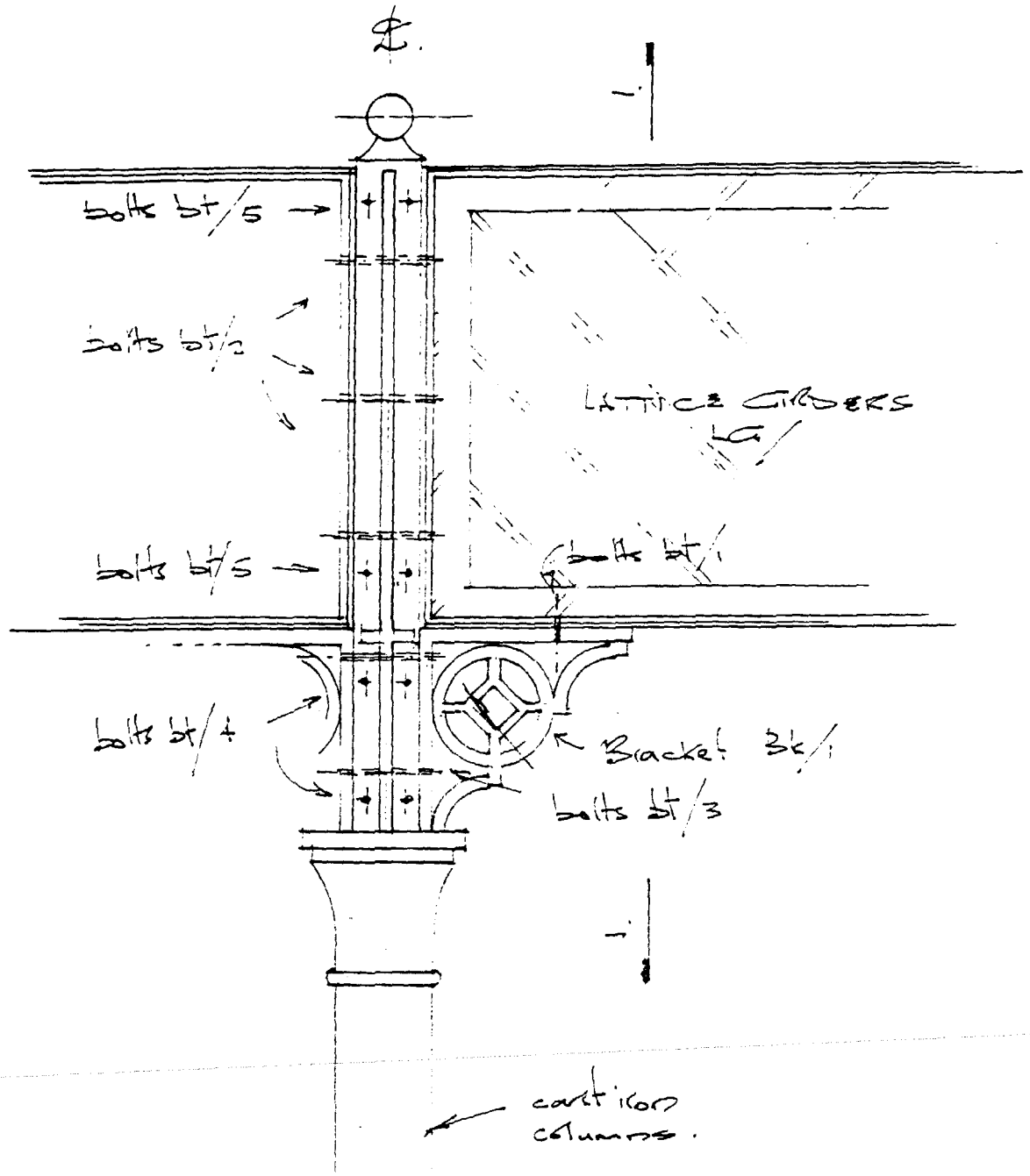

Side Elevation
on Column Head.

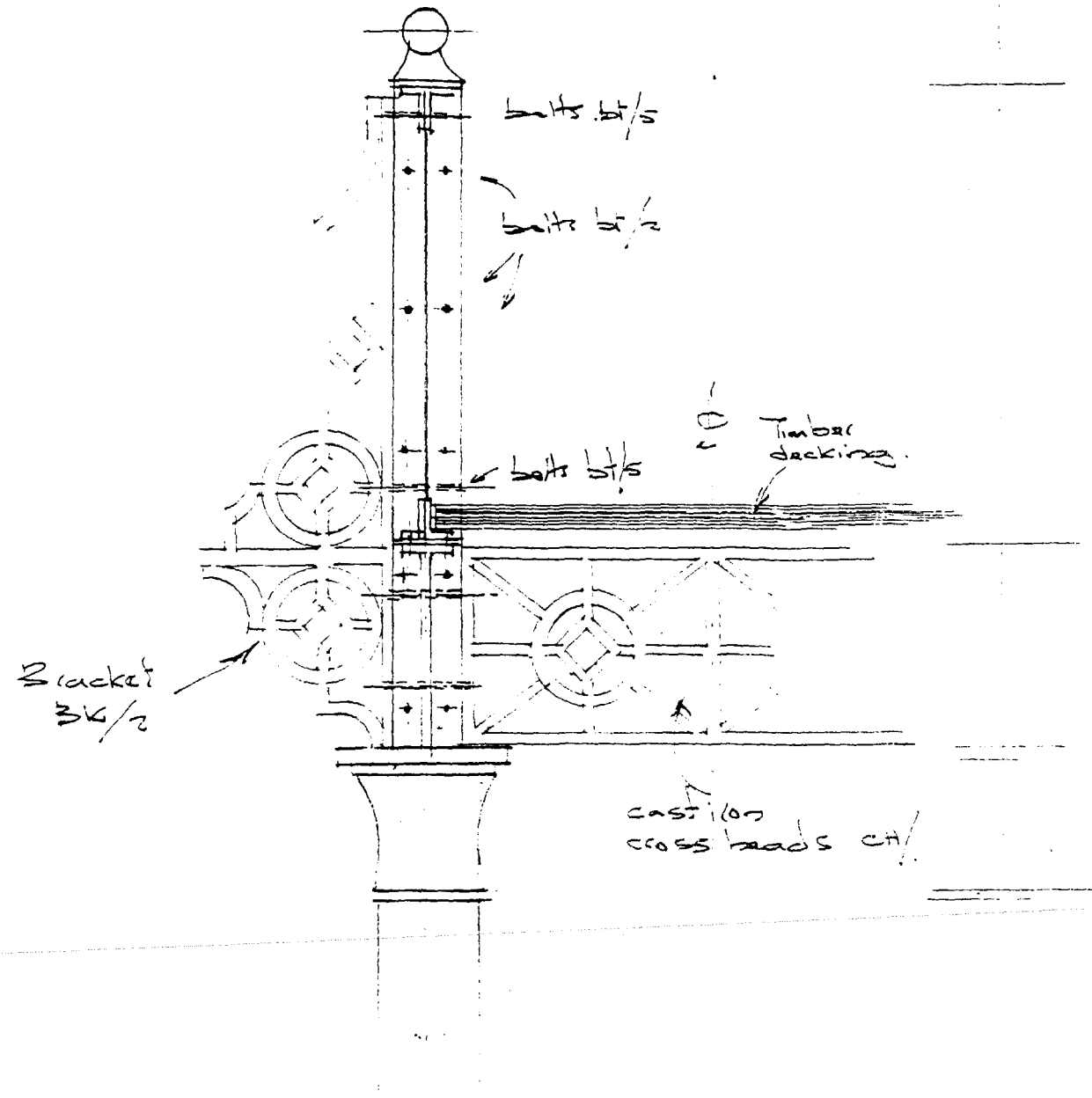

Section 1-1.

B. Hudson Consulting Engineers Ltd. Seven Winds, 50a Worksop Road, Mastin Moor, Chesterfield S43 3DJ. Tel: 01246 472779. Fax: 01246 280181		Sheet No. SKetch 1.
Client WILCON HOMES Ltd.	Project SPALDING.	Prepared by
Location DISMANTLING OF FOOTBRIDGE		Date 14/9/98

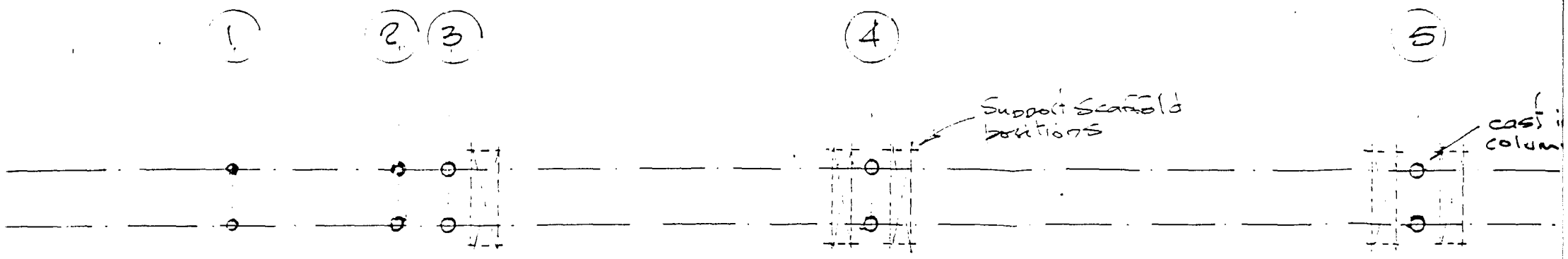

Plan at Ground level.

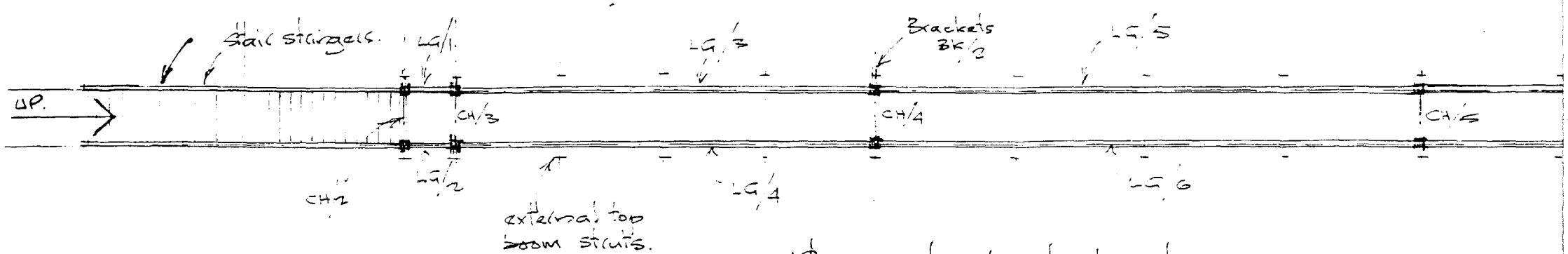

Plan at deck level.
(omitting decking)

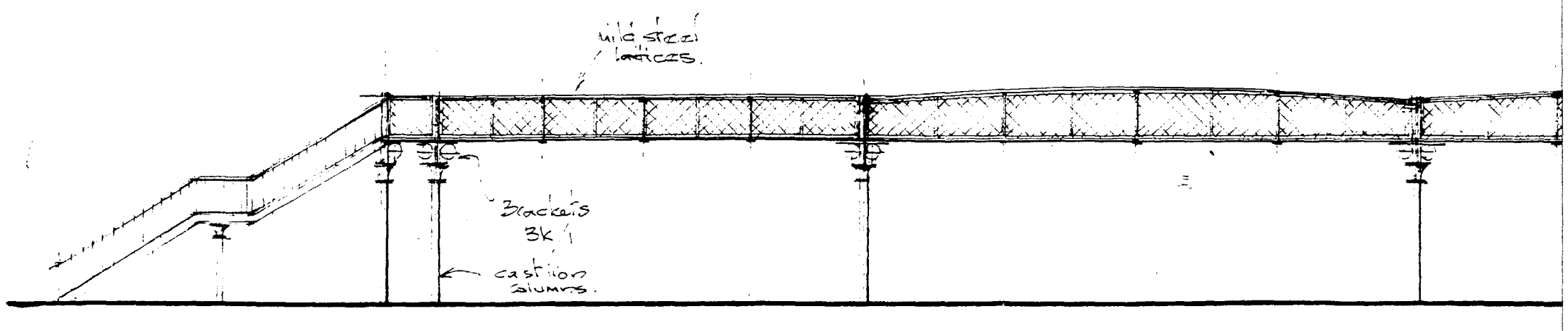

Elevation.

B. Hudson Consulting Er
Seven Winds, 50a Worksop Road, Mastin Moor, Chesterfi

Client
WILCON HOMES

Location
DISMANTLING OF