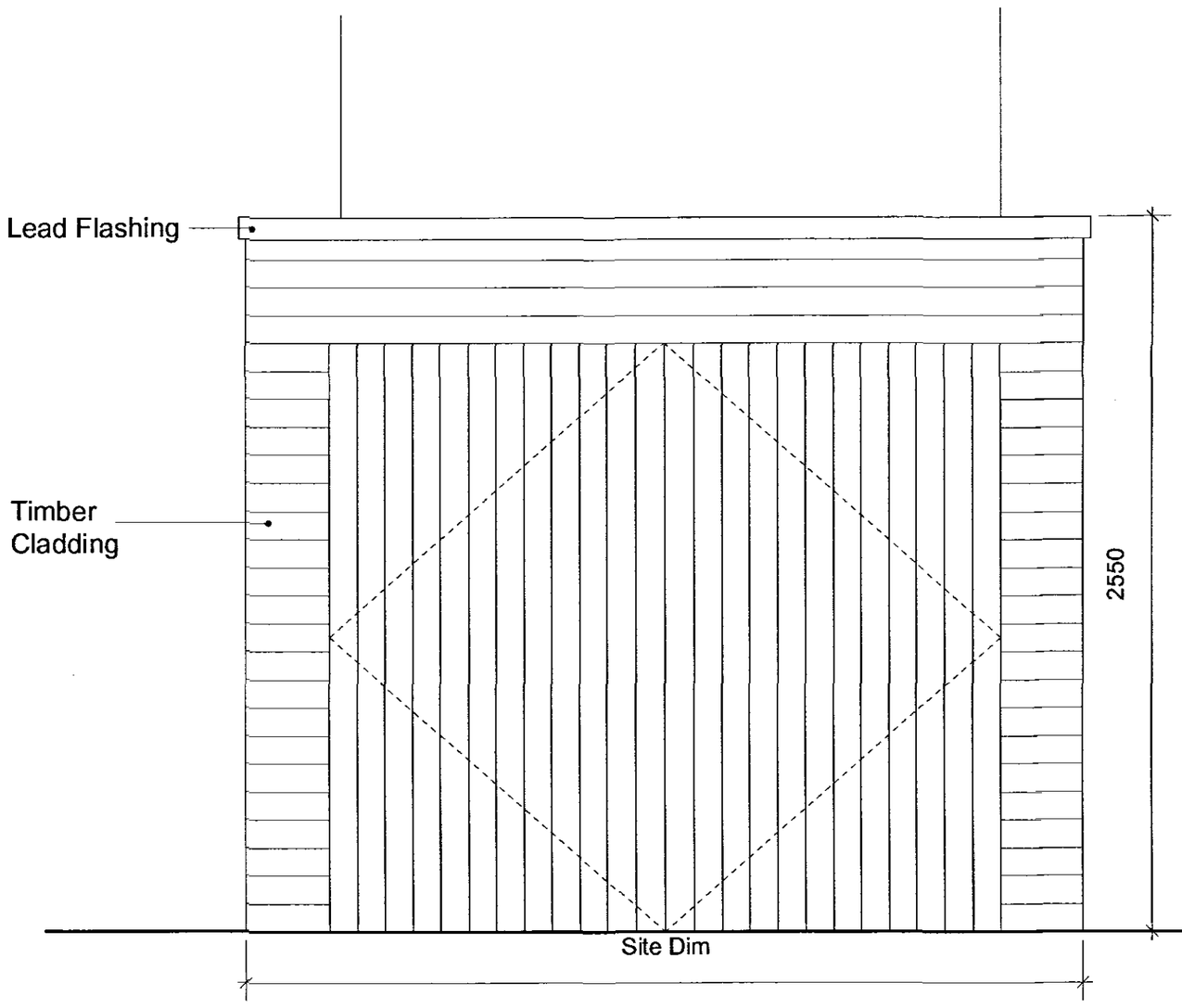

ELEVATION 1:20

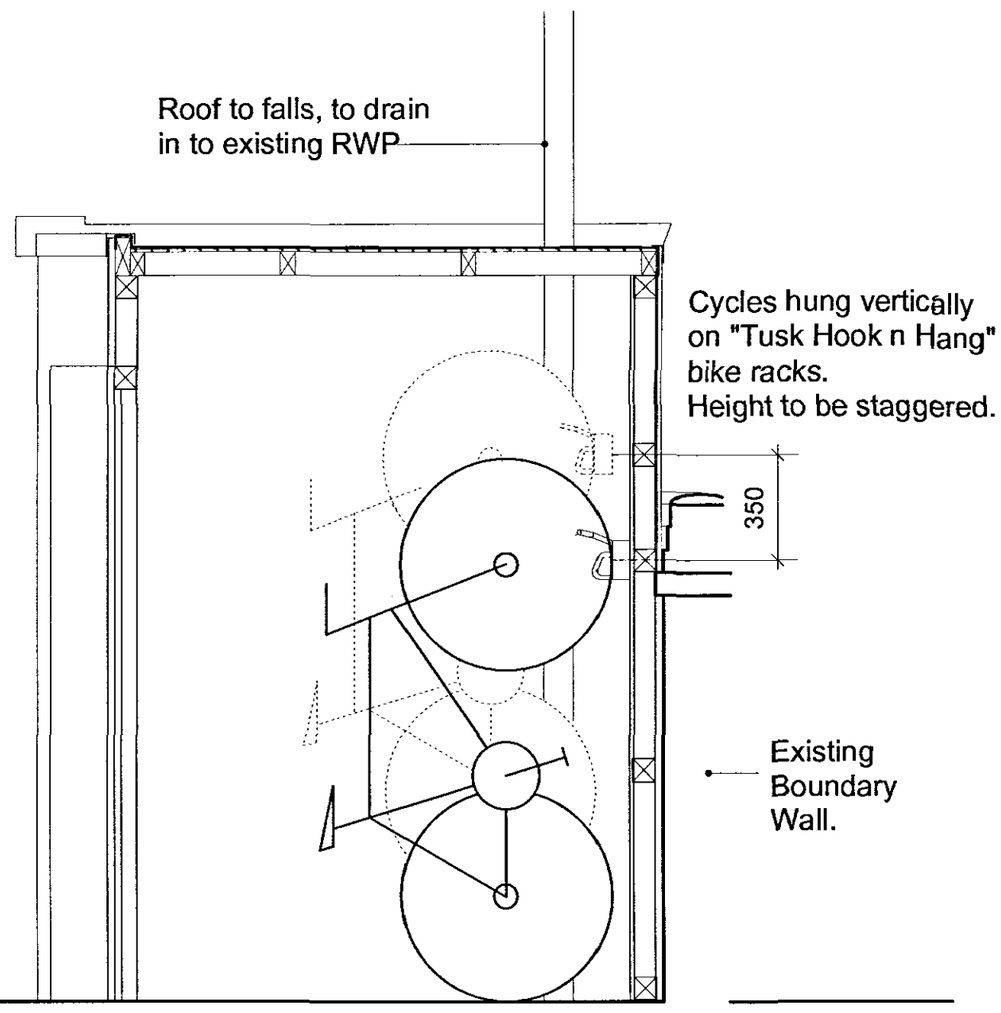

SECTION 1:20

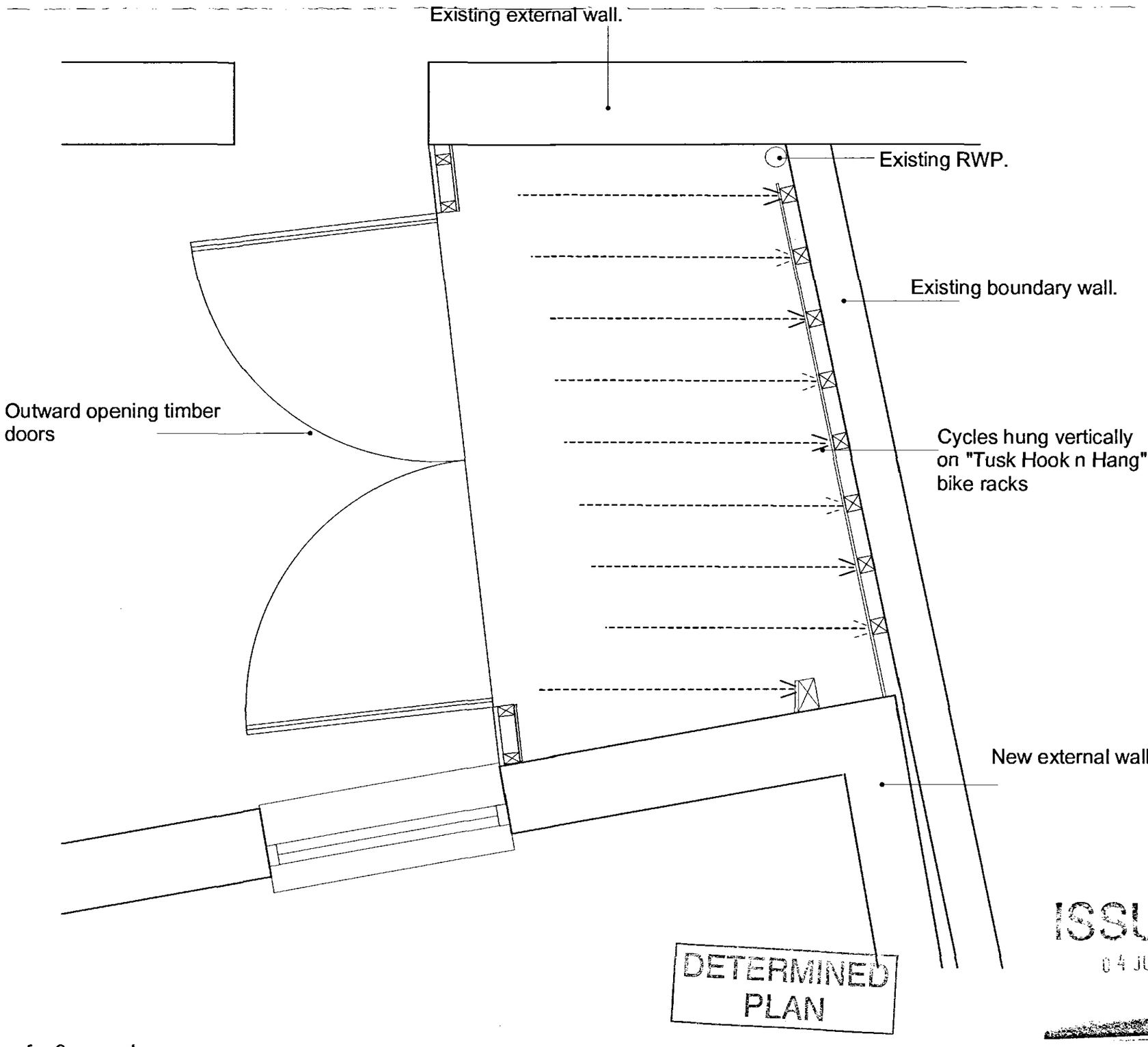

SBC
PLANNING & DEVELOPMENT
- 6 JUL 2006
Ref. 0960/06

DETERMINED PLAN

ISSUED
04 JUL 2006

PLAN 1:20

Cycle Parking for 9no. cycles.

Revision		Details of Bike Store as Proposed	Job No. FSDS	Drawing No. P506	Scale @ A3 1:20	Date 03.07.06	Drawn FB
NOTES - Do not scale drawings - All dimensions to be checked on site - Drawing to be read in conjunction w/ all other contract documentation		**FORMER FIRE STATION,** Double Street, Spalding, Lincs.	**MALCOLM PAWLEY ARCHITECTS** 18 WINCHESTER WALK, LONDON SE1 9AG			Tel: 020 7378 6349 Fax: 020 7403 8470 Email: mail@mpaset.co.uk	