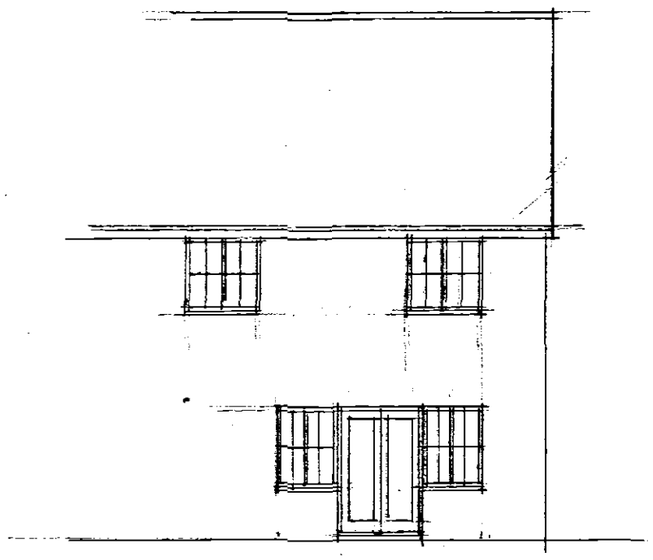

EXISTING REAR ELEVATION 1:100

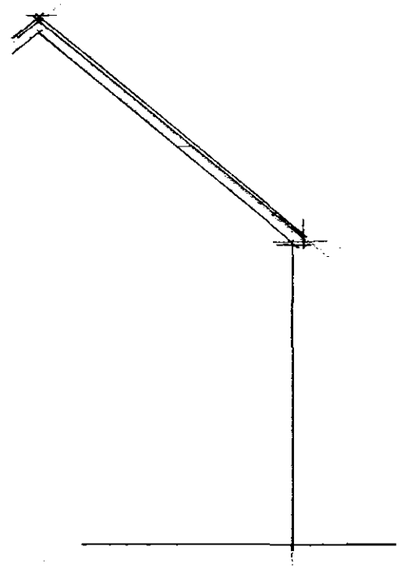

SIDE ELEVATION 1:100

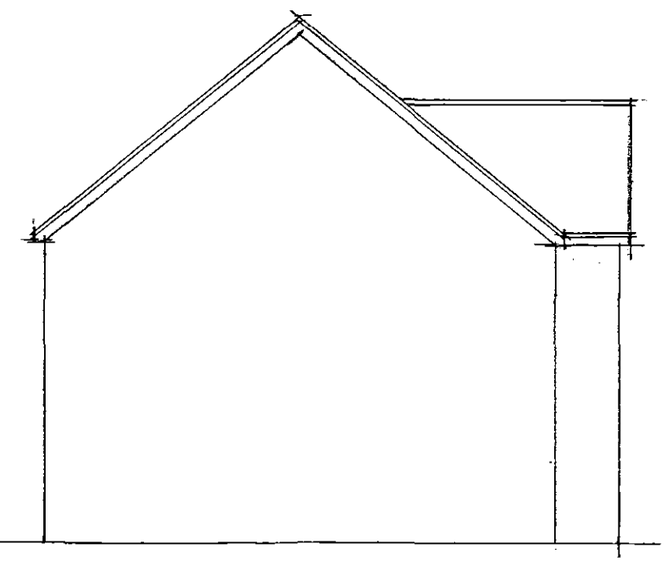

SIDE ELEVATION 1:100

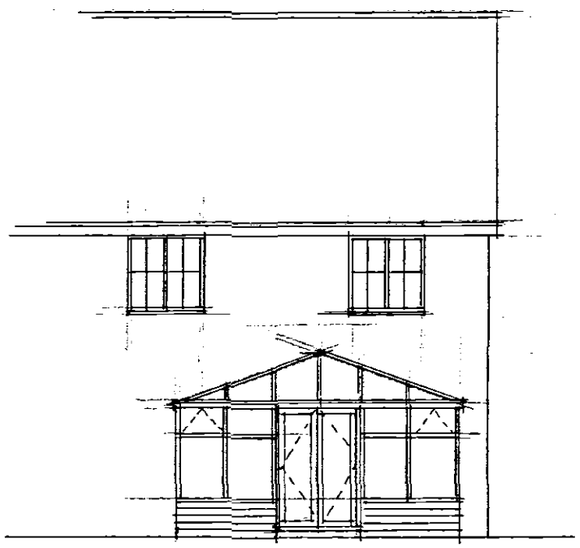

PROPOSED REAR ELEVATION 1:100

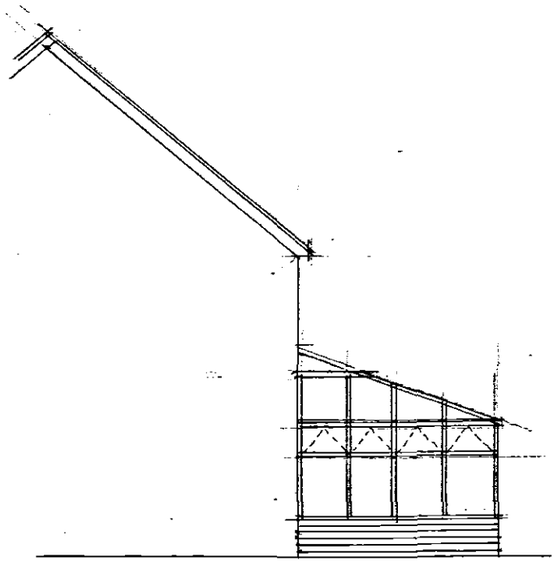

SIDE ELEVATION 1:100

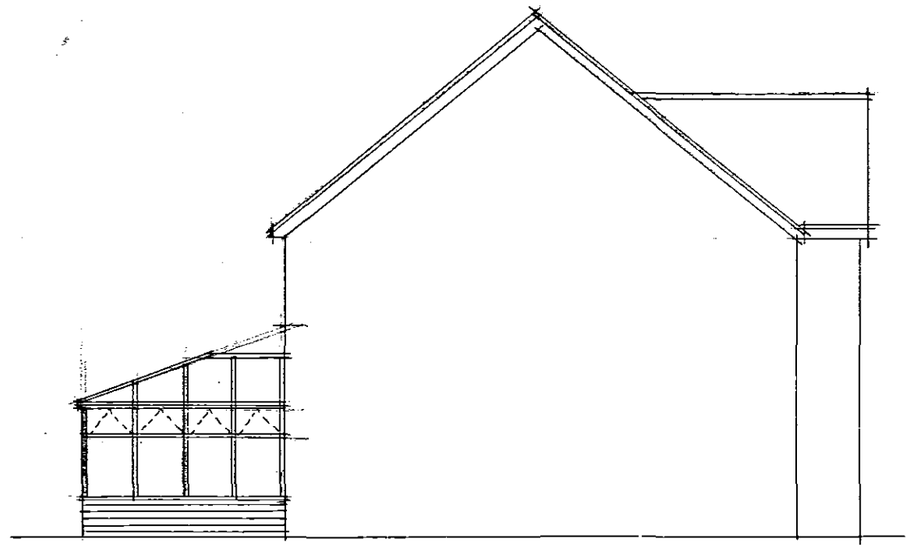

SIDE ELEVATION 1:100

SHDC
PLANNING & DEVELOPMENT
2 8 SEP 2003
Ref 1122/03

DETERMINED
PLAN

PROPOSED CONSERVATORY,
NO.11 SHEARER DRIVE, SPALDING, LINCS
ON BEHALF OF MR & MRS BAKER
SCALE 1:100 DATE SEPT 2003