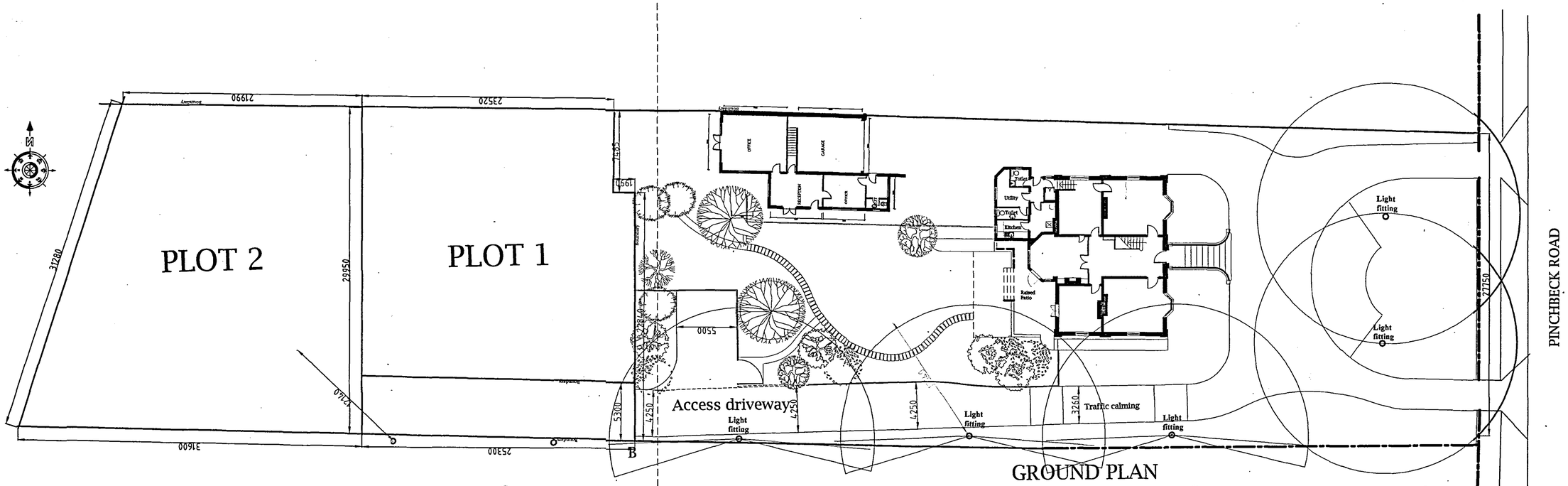

GROUND PLAN

SITE PLAN

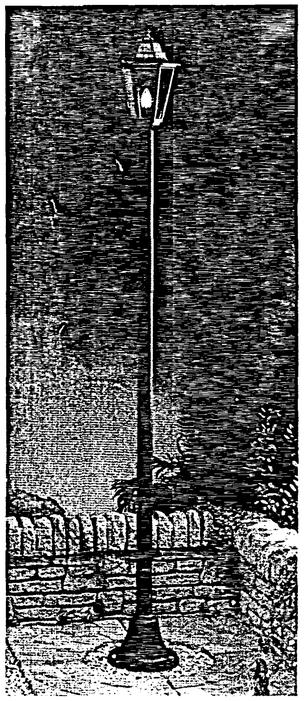

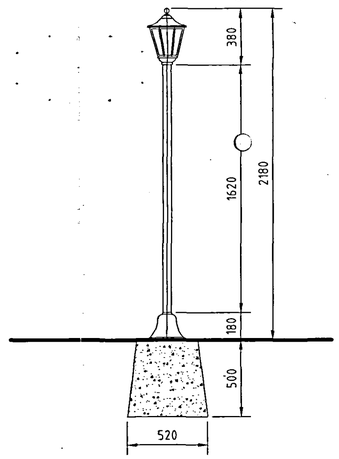

DETAIL OF LAMP STANDARD

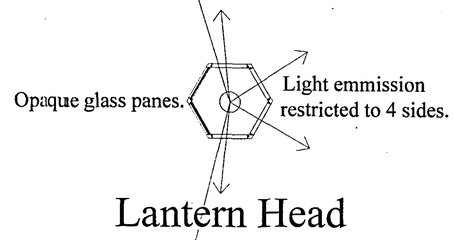

Lantern Head

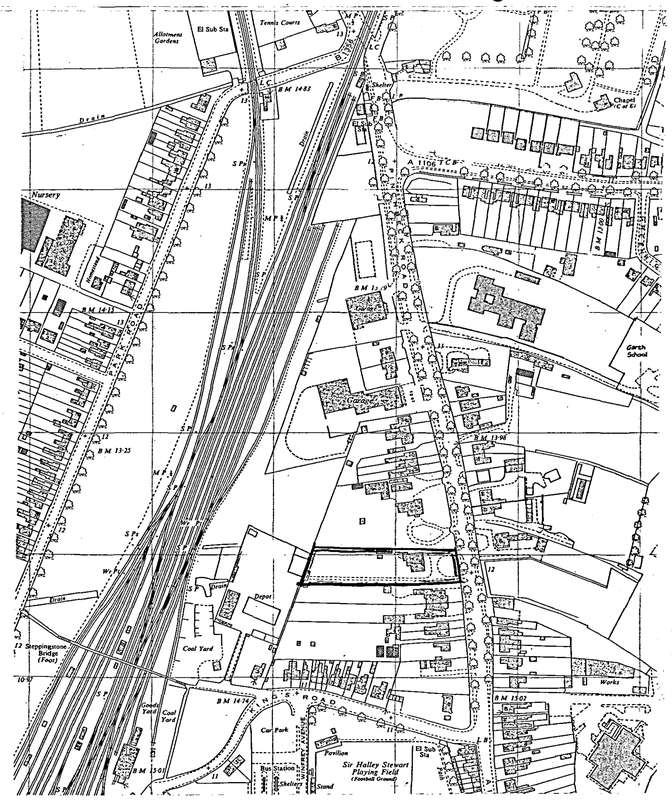

LOCATION PLAN
Scale 1:2500

AMENDED PLAN
Ref. A1

SHDC
PLANNING & DEVELOPMENT
- 9 OCT 2006
Ref. 1324/06

JOHN D LYNCH
Partnership
CHARTERED ARCHITECTS

Client
John D Lynch Partnership

Project
Driveway Lighting Scheme

Drawing
Plans & Details

Date : Sept. 2006
Drawn JDL

Job No. 1047
Drawing No. RL/W/1A

Scale. 1:2500, 1: 20, 1:200
Revision No. B