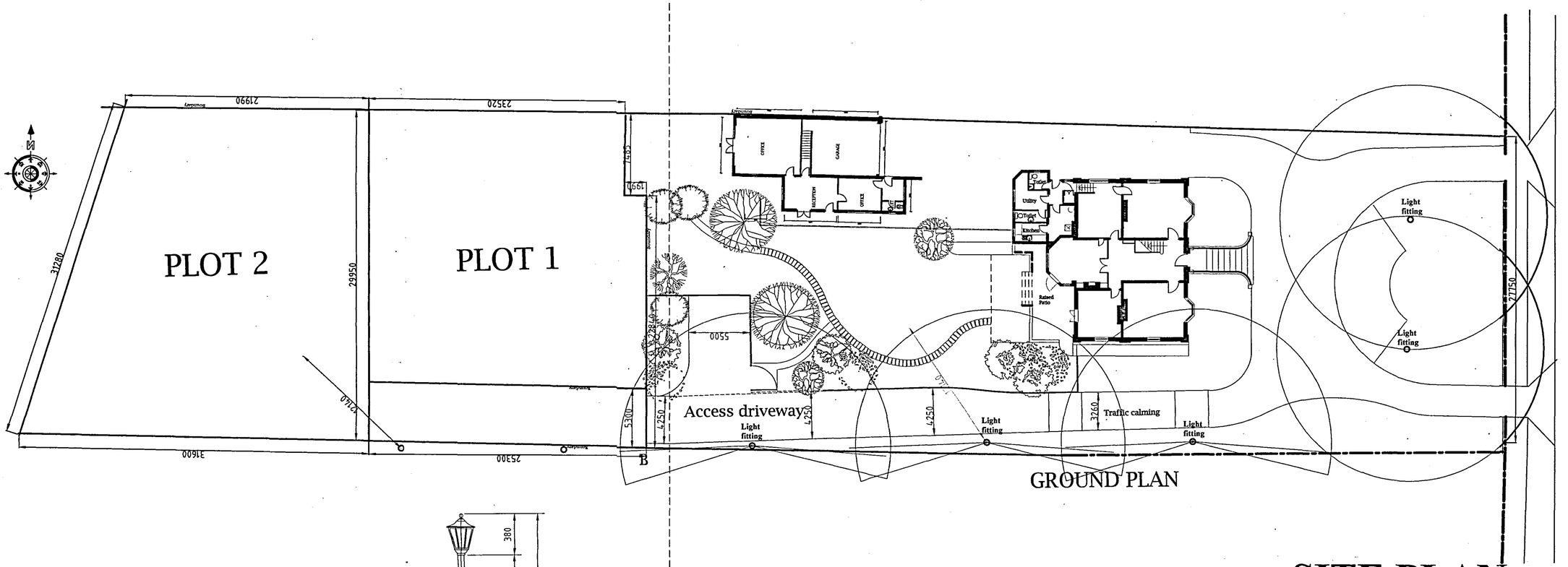

GROUND PLAN

SITE PLAN

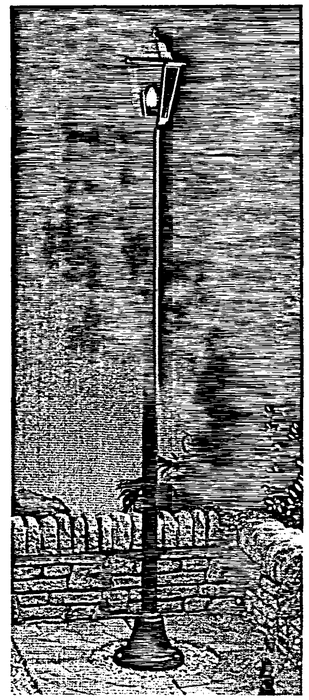

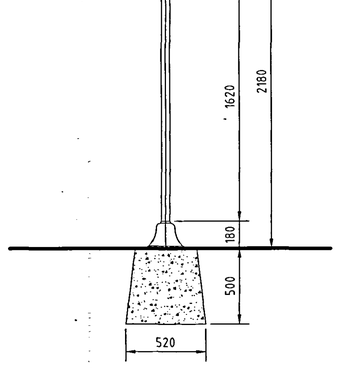

DETAIL OF LAMP STANDARD

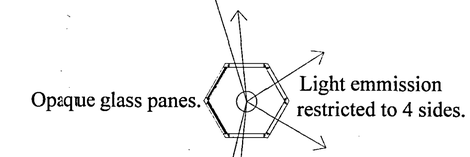

Lantern Head

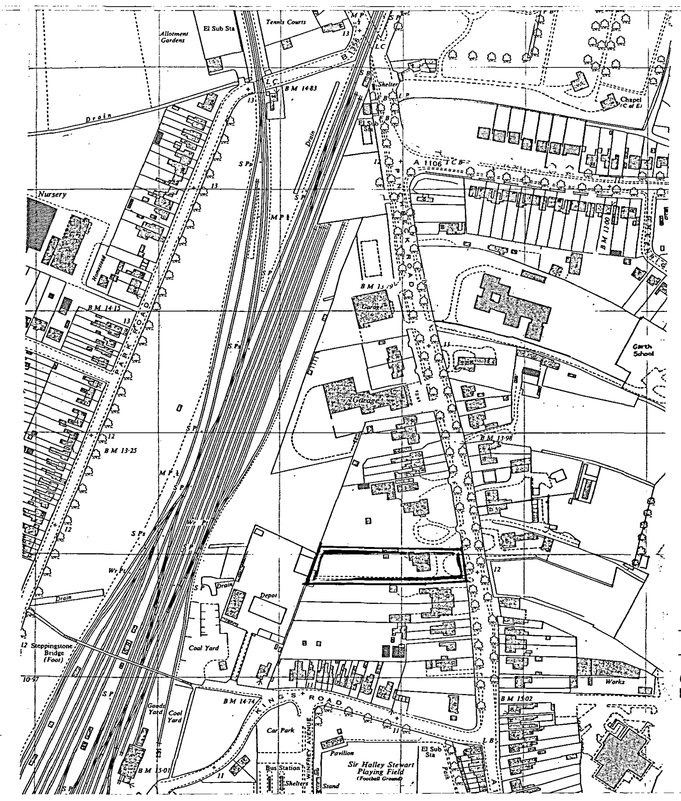

LOCATION PLAN
Scale 1:2500

AMENDED PLAN
Ref. A1

SHDC
PLANNING & DEVELOPMENT
- 9 OCT 2006
Ref. 1324/06

JOHN D LYNCH
Partnership
CHARTERED ARCHITECTS

Client John D Lynch Partnership	
Project Driveway Lighting Scheme	
Drawing Plans & Details	
Date : Sept. 2006	*Drawn* JDL
Job No. 1047	*Drawing No.* RL/W/1A
Scale. 1:2500, 1: 20, 1:200	*Revision No.* B