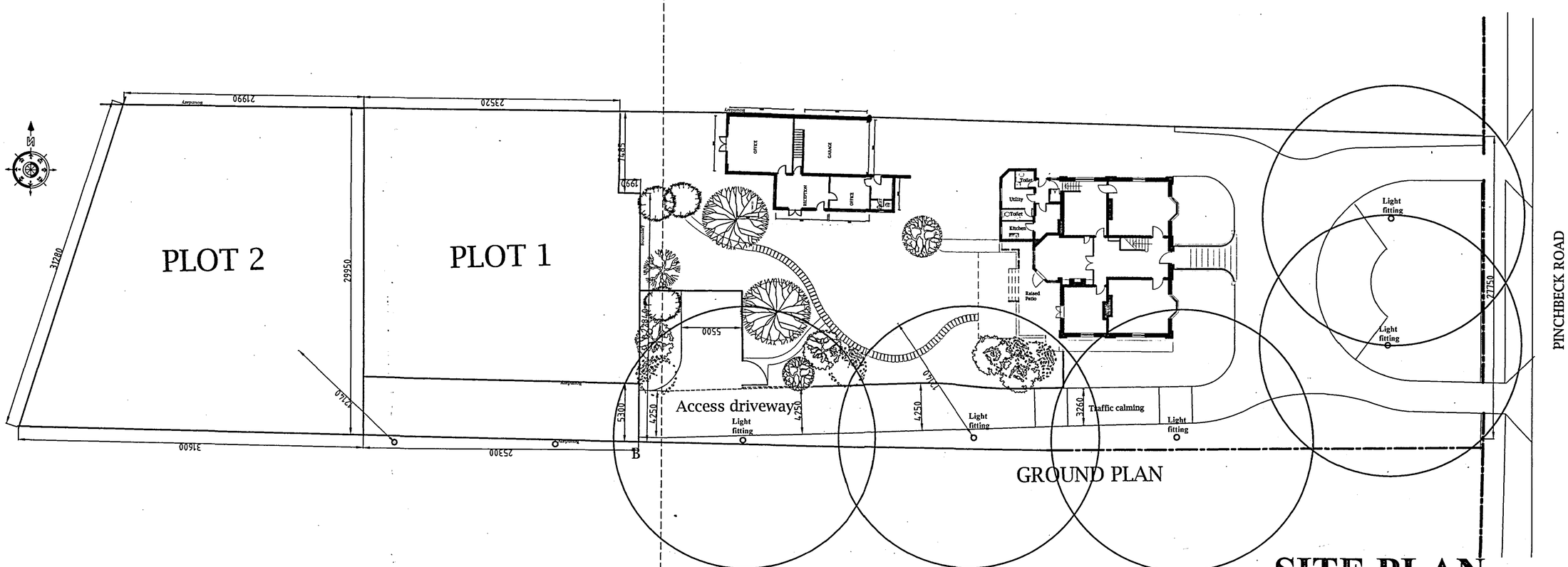

SITE PLAN

GROUND PLAN

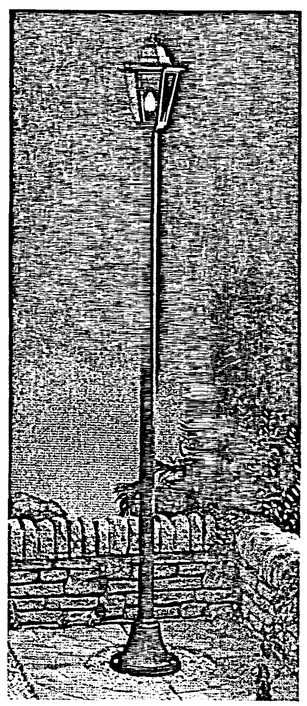

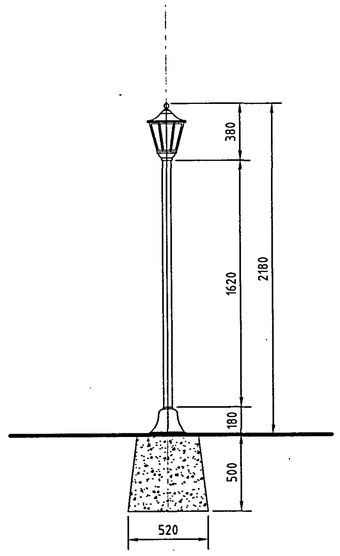

DETAIL OF LAMP STANDARD
Scale:1:20

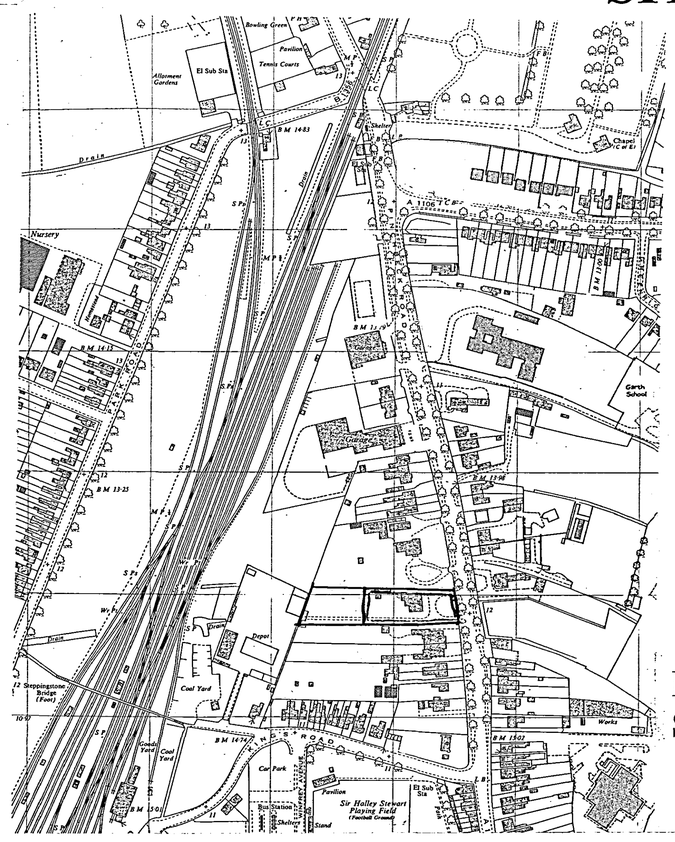

LOCATION PLAN
Scale 1:2500

SHDC
PLANNING & DEVELOPMENT
2 0 SEP 2006
Ref. 13249/06

SUPERSEDED

JOHN D LYNCH
Partnership
CHARTERED ARCHITECTS

Client John D Lynch Partnership	
Project Driveway Lighting Scheme	
Drawing Plans & Details	
Date : Sept. 2006	*Drawn* JDL
Job No. 1047	*Drawing No.* RL/W/1
Scale. 1:2500, 1: 20, 1:200	*Revision No.*