

NORTH ELEVATION 1:100 WEST SOUTH EAST

Line of face of fence posts

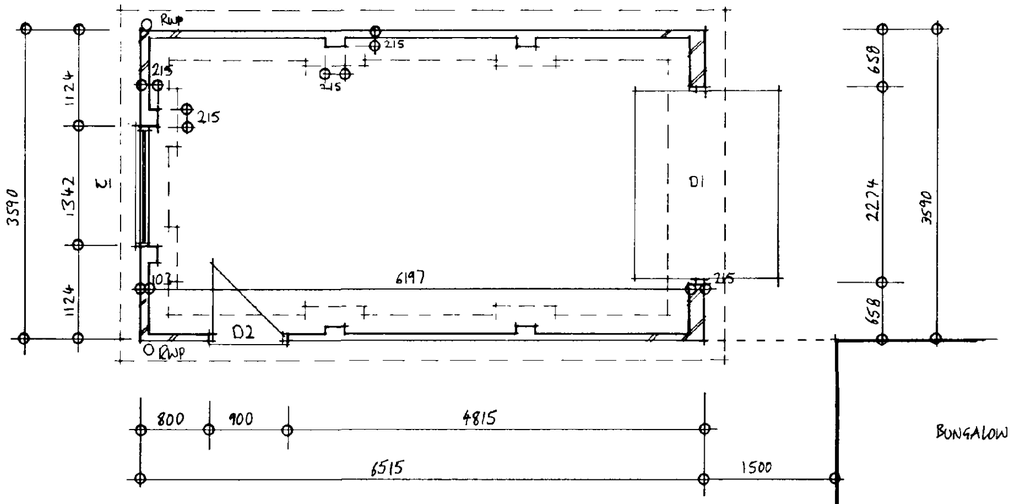

PLAN 1:50

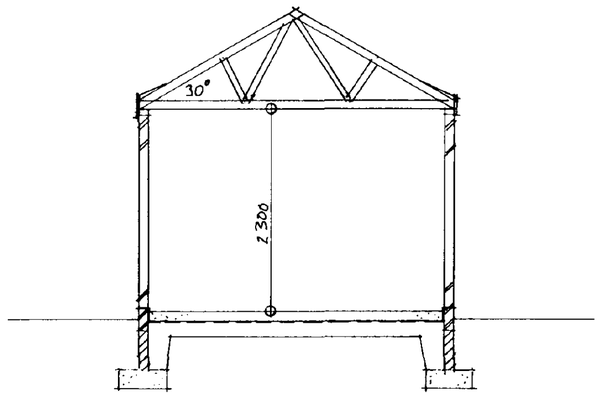

SECTION 1:50

BUNGALOW

ROOF

Main roof area to be prefabricated trussed rafters at 600mm cts, pitch 30 degrees.
Lateral restraint straps to be provided at gables at 2000mm cts. max. 'Bat' straps or similar 5 x 30mm to span over 3no. at roof and ceiling level and to be turned down 100mm . Provide noggings between structural members.
Wall plate to be 125 x 75mm and to be fixed by 'Bat' straps 30 x 5mm x 1000mm long at 2000mm cts.
All bracing for prefabricated trussed rafters to be in accordance with BS 5268:Part 3:1985 to be 100 x 25mm diagonals and longitudinals to be nailed to each truss member. During roof construction trussed rafters should be subject to temporary wind bracing.
Approved reinforced roofing felt underlay to be laid over trusses, lapped 150mm vertically and horizontally in accordance with BS 5534:Part 1:1978 carried well into gutters and secured with clout nails. Continuous tilting fillet at eaves to be provided to prevent water trap.
Approved quality softwood treated battens of 38 x 25mm section to be laid to a max gauge as specified and secured with non-ferrous nails. Battens with sawn ends to be treated with preservative.

ROOF COVERING

Roof covering to be Marley Modern interlocking tiles 330 x 420mm in size, in even courses, not more than 345mm gauge, and a minimum head lap of 75mm. Colourfinish to be smooth grey. Tiles to be laid with broken bond. Local areas to be fixed. Tiles to main roof to be fixed using non ferrous clips (code: 30302) and non ferrous 50 x 3.35mm nails. Non ferrous Verge Clips to be code: 30384 and non ferrous 25 x 3.35mm nails. Non ferrous Eaves Clips to be code: 30303 and non ferrous 25 x 3.35mm nails. All to be in strict accordance with manufacturers recommendations. Only Marley fixings as referred to above to be used for all tiling.

ROOF PLAN 1:50

FOUNDATIONS

Foundations to loadbearing walls to be ST3 concrete to BS 5328:1981, are to be 240mm thick. Bed of foundation to be generally as shown but may be amended if excavation shows that the exposed foundation bed is unsatisfactory. The foundation trench must be inspected by the Architects prior to concrete placing and fully approved by the Architects.

Foundation widths are as follows:-

100 mm wide walls - 550 mm wide foundations
215 mm wide walls - 700 mm wide foundations

LINTELS

To be as indicated on lintel schedule. Provide cavity trays over all external lintels. Lintels to be installed in strict accordance with manufacturers recommendations.

LINTEL SCHEDULE

Door/Window No	Clear Span	End Bearing	I.G. Lintel Type
D1	2274	150	L11
D2	900	150	L11
W1	1342	150	L10

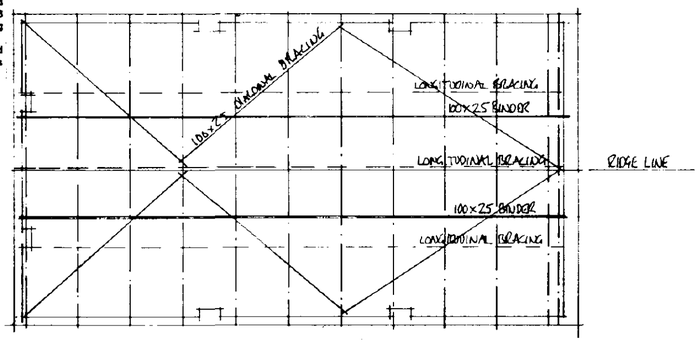

RAINWATER DRAINAGE

To be 110mm Osmadrain with flexible joints to fall 1 in 40 to soakaway min. 5m away from building. Soakaway to be 900mm dia x 1200mm deep with top 500mm vegetable soil over mineral board cover with granular material below. This subject to standard percolation test.
Rainwater goods to be Osma Squareline upvc rainwater system.
Gutter laid at 1:600 fall.

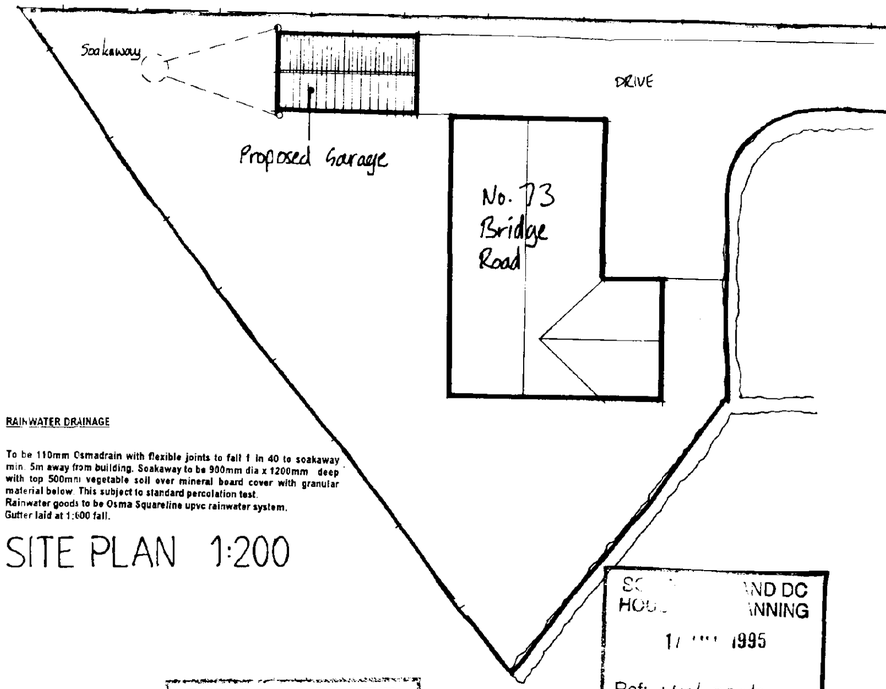

SITE PLAN 1:200

DETERMINED PLAN

SC ND DC
HOU NNING
1/ 1995
Ref: H18/0737/95

WALLS

Walls to be to dimensions shown and to be in strict accordance with BS 5628 : Part 3 : 1985. Walls below dpc to be 100 mm width (or 215 mm width as indicated on plan) comprising 100 mm AAC Standard Dense Blocks 7N/mm² (or 215 mm AAC Standard Dense Blocks 7N/mm² depending on wall thickness shown on plan). F.L. durability designation brick to be provided 150 mm below ground level up to dpc level.
Walls above dpc. to be in facing brick to widths shown on plan (103 mm or 215 mm thick walls): mortar for brick and blockwork above ground dpc to be 1:1:6 cement : lime : sand and for blockwork below ground level dpc to be 1:¼ cement : sand. Hyload dpc to be be built in 150 mm above ground level.

FLOOR

Floor to comprise 150 mm steel float finished concrete (C20P mix) with 1 layer A142 steel mesh reinforcement placed 50 mm from bottom of concrete; on 1200 gauge dpm lapped with dpc's ; on 25 mm sand blinding on min 150 mm well consolidated hardcore. Dpm to be brought up at perimeters to lap with horizontal dpc.
Note : Any fill etc. found when excavation for floor must be removed. Hardcore must not exceed 600 mm depth and must be layed & consolidated in layers not exceeding 150 mm.

JOHN D LYNCH
partnership
CHARTERED ARCHITECTS

project/drawing
PROPOSED GARAGE AT 73 BRIDGE ROAD, SUTTON BRIDGE

scale	*date*	*drawn*
	6/95	AMW

project no.	*drawing no.*
1301	AB/4

revisions

notes

Do not scale from this drawing.

This drawing is copyright and may not be altered, traced, photographed or used for any purpose other than that for which it is issued without written permission from the John D Lynch Partnership.

The General Contractor is to check all dimensions on site and report discrepancies to the architect.

All details shown on this drawing including foundations are based upon typical site conditions related to the area. No responsibility can be accepted for abnormal conditions which may be discovered during construction unless reported to the Architects so that design amendments may be considered. Site soil surveys are recommended in respect of foundations to establish specific site conditions before foundation work is undertaken.

revision *date*