STREET FURNISHINGS LTD

*The **one-stop shop** for all highway professionals*

4

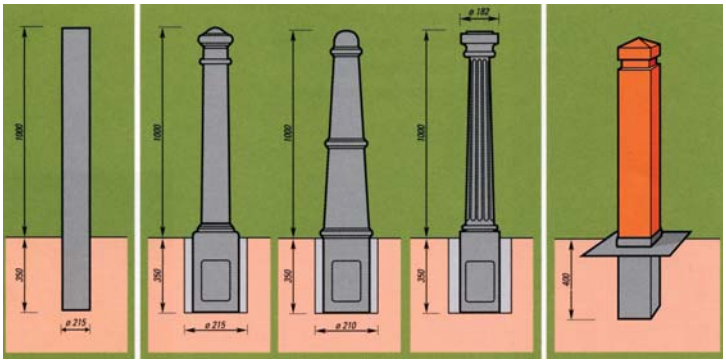

Collapsible Bollards	2-4
Removable Bollards	5-8
Fixed Bollards	7
Telescopic Bollards	9-11
Anti Ram-Raid Bollards	12
Mild Steel Bollards	13
Stainless Steel Bollards	14-15
Decorative Cast Iron Bollards	16-17
Pavement Protection Bollards	18
Boundary Bollards	19
Recycled Bollards	20-21
Polyurethane Bollards	22-29
Composite Bollards	30
Plastic Bollards	31-35
Allegrini Verge Post Bollards	36
Verge Post Bollards	37
Concrete Bollards	38-39
Wooden Bollards	40
Illuminated Keep Left Bollards	41
Flexible Flecta Keep Left Bollards	42
Amenity Lighting Bollards	43

Section 1
Traffic Management
Temporary Signage
Roadworks Equipment

Section 2
Highway Maintenance Products

Section 3
Pedestrian Guardrailing
Crash Barriers & Fencing

Section 4
Decorative & Amenity Bollards

Section 5
Amenity & Street Furniture

Section 6
Car Parks & Access Control

Collapsible Bollards

Key operated standfast post (ex stock)

This highly successful post is ideal for reserving individual car parking spaces. It can be used as a visual deterrent to restrict access into driveways. Can be locked in the down or upright position. The floor mounted base is secured to a prepared concrete foundation by 3 No. M12 anchor bolts.

In the case of multiple orders, locks can be supplied with the same keys or with keys to differ. Anchor bolts as well as build in base option can be supplied at an extra cost.

Specification:
63.5mm dia x 620mm o/height mild steel. Base cast aluminium.
Finish: Yellow powder coated for high visibility. Other colours available on request.
Ground clearance: 102mm
Weight: 6kg
Alternatives: Galvanised finish. Rigid version available.

Padlock standfast collapsible post (ex stock)

A low cost popular post designed to restrict access to car parking spaces, driveways, etc. Floor mounted base is secured by the use of 3 No. M12 anchor bolts to a prepared concrete foundation. It is lockable in the upright position by means of a padlock, which can be supplied with keys the same or to differ. Padlock, anchor bolts and alternative build in base can be supplied at extra cost.

Specification:
63.5mm dia x 768mm o/height
Finish: Hot dipped galvanised
Ground clearance: 102mm
Weight: 7kg
Alternatives: Powder coated only. Rigid version available

Triangular padlock parking barrier

A space reservation barrier designed to fold completely flat when not in use. Vehicles can drive over it without damage to vehicle or post. The barrier can be locked in the upright or down position. Secured by a padlock supplied with 2 No. keys to pass or differ. This device is easily floor mounted by 3 No. M12 anchor bolts (supplied).

Specification:
Fabricated from 5mm thick mild steel.
650mm erected height, 58mm a/ground fully collapsed, 762mm o/length, 115mm o/width.
Finish: Red powder coated with white banding
Ground clearance: 58mm
Weight: 12kg

▶ Hinged lockable parking post (ex-stock)

Designed for the reservation of individual car park bays. When erected the post prevents unauthorised access and provides control without the need for supervision. Only the authorised user's key will release the locking mechanism, allowing the post to be lowered and thus enabling the vehicle to pass over it. In some situations it is possible to site the post so that it can be re-erected when the space is occupied, thereby acting as an added vehicle theft deterrent.

The hinged lockable post features an integral cylinder lock and a totally enclosed locking mechanism. To erect, simply raise the post to the vertical position and apply a moderate downward pressure to the top of the post, This will secure the post within the base plate recess. The key is not required to lock the post. To lower, release the locking mechanism with the key and lower the post. The post is lockable in the up and the down position.

Type B hinged lockable post

Available for emergency service access. Usually specified by local authorities or fire brigades, this post is similar to the hinged lockable post (above) but includes an extended hinge pin (called a type B adaptor) to allow a fire brigade padlock to be fitted at the bottom of the post.

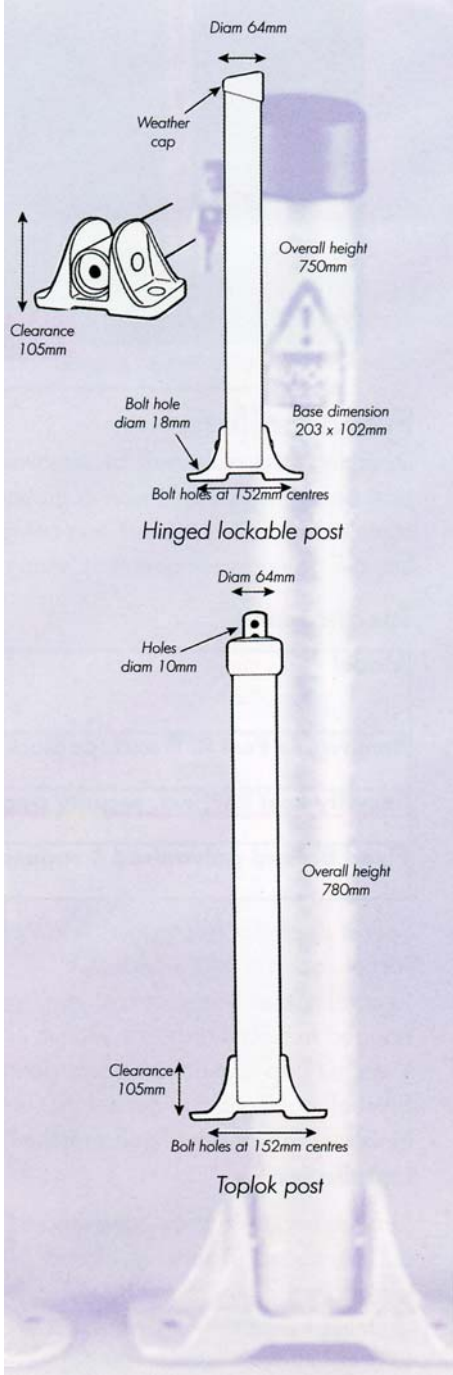

▲ Hinged Toplok parking post

Similar in design and use to the hinged lockable post. The Toplok post does not have an integral cylinder lock or spring assistance, but requires a padlock to be located on the locking rod which protrudes through the weather cap. The locking rod features two holes; the lower hole is for locating a padlock when the post is in the vertical position and thereby locking the post upright. The upper hole is for safety and conveniently retaining the padlock when the post is in the lowered position.

▶ Stealth post

For reserving individual parking bays as well as controlling common access points for smaller car parks and low use access areas. The stealth post also offers a deterrent to car theft when locked upright, and extra security for car parks in general. Fitting flush with the ground when down, the posts provide no obstruction to vehicles or pedestrians. The hinged lid lowers down to safely cover the excavated hole when in both the up and down positions. **Not suitable for heavily used areas nor for HGV use**.

Heavyweight key operated post

A larger and stronger version of the key operated standfast post, fulfills the role where a more substantial post is required. The base is pre-drilled to accept 4 No. M12 anchor bolts. The locks can be supplied with keys the same or to differ. Anchor bolts and alternative build in base can be supplied at an extra cost.

Specification:
89mm dia x 762mm o/height. Mild steel post and base.
Finish: Red powder coated with a white band (other colours available on request).
Ground clearance: 110mm
Weight: 10kg
Alternative: Rigid version available

Heavyweight folding lockable post

This heavy duty post is intended for those applications where a standard car parking post is insufficient. For use mainly where heavy vehicles are involved. The floor mounted post is lockable in both the down and upright positions by means of a padlock. Standard post is floor mounted. Alternative build in base, padlock and anchor bolts available at an extra cost.

Specification:
115mm dia x 994mm o/height
Finish: Black and white finish (galvanised base)
Ground clearance: 150mm
Weight: 23kg
Alternative: Rigid version available

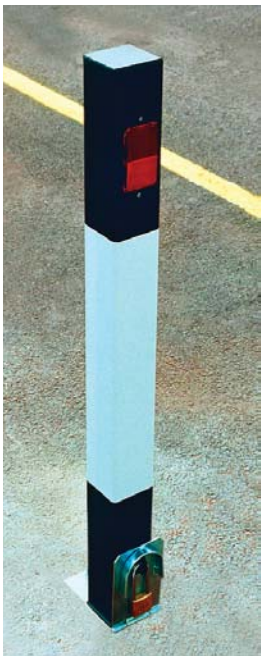

▲ ▶ Heavyweight removable bollards (ex-stock)

This range of bollards will meet all requirements to prevent unauthorised entry of vehicles and restrict access. The bollard is a heavy duty post that locates into a socket embedded into concrete. The post is locked in position by use of the socket flap and a padlock (supplied at extra cost). When the post is removed, the socket flap can be padlocked in the closed position keeping the socket free from rubbish until the post is next used. The removable bollard is available in three sizes:
Small: For use in driveways, forecourts, etc.
Intermediate: Car park use, town centres, supermarkets, garages.
Large: For heavy duty applications where lorries, vans, etc. are involved.

Handles are supplied on the large bollard only to assist removal of the post. All three sizes have amber reflectors on both sides.

Standard colour: Black and white (other colours available).

We are also able to supply rigid posts in addition to these removable posts. These are available in either floor mounted or build in type versions. Chain lugs are not standard but can be supplied upon request.

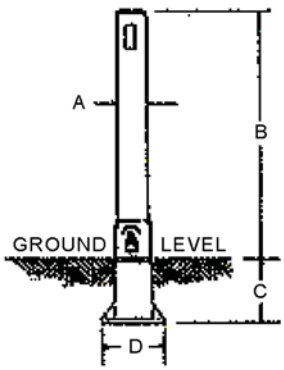

Ref	Small	Inter-mediate	Large
A	70 x 70	80 x 80	100 x 100
B	690	965	1100
C	200	250	300
D	140	140	200
Weight	7kg	13kg	22kg

Measurements in mm

SF-GFC removable bollard series

Generally as for SF-GFC fixed ornamentals, but removable bollards of 114mm diameter lock by a padlock (available extra) and retaining pin assembly into the standard removable post socket (depth below ground of 267mm). Socket is galvanised finish only.

SF-GFC6000 and Lighthouse removable have a fabricated, galvanised ground socket. Size 240x230x400mm deep. Socket has welded fixing spikes to give firm anchorage.

It is recommended to galvanise all SF-GFC bollards, fixed and removable, for better weather and site protection.

Factory finishes include galvanising, self colour, primed, painted, PPA and polyester coated. A variety of RAL and BS colour options can be catered for.

Left: SF-GFC 3000 removable
Right: SF-GFC 1500 removable

SF-GFC 1500 black fixed & removable ornamental bollard

SF-GFC 5000 black fixed ornamental bollard

Installation:

Fixed ornamentals
Cast into concrete to 300mm - 500mm deep by 300mm square, depending on ground conditions and bollard model.

Removables
114mm diameter; cast socket into concrete approx 267mm deep by 300mm square, allowing for drainage from bottom of excavated socket hole.

165mm diameter; cast in 400mm deep minimum by 300mm square minimum

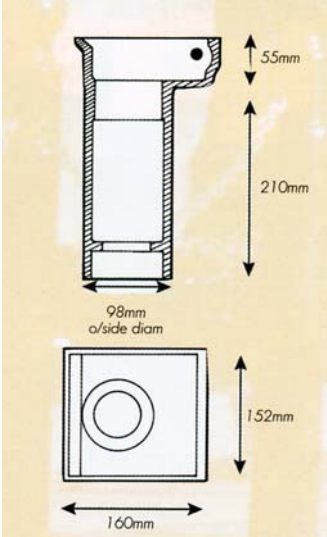

SF-GFC removable socket

Model ref	o.d. (mm)	Above ground height (mm)	Socket depth below ground (mm)	Lift out weight (kg)	Ground socket weight (kg)
SF-GFC 2000 removable	76	1000	267	9	9
SF-GFC 2000s removable	76	1000	267	8	9
SF-GFC 800 removable	114	500	267	12	9
SF-GFC 1700 removable	114	1000	267	17	9
SF-GFC 1500 removable	114	1000	267	17	9
SF-GFC 3000 removable	114	900	267	15	9
SF-GFC 4000 removable	114	900	267	15	9
SF-GFC 2R removable	114	1000	267	14	9
SF-GFC 5000 removable	114	1000	267	17	9
SF-GFC 7000 removable	114	1000	267	18	9
Lighthouse removable	165	1000	400	28	9
SF-GFC 6000 removable	165	1000	400	36	9

▲ ▶ SF-GFC removable & fixed ornamental bollards

Steel tube/malleable iron rings.

These bollards are available in both removable and fixed versions. Please see the previous page for details and specification of the removable versions.

Aesthetically pleasing, for safety, security and protection, preventing unauthorised parking and access. SF-GFC ornamental bollards provide an attractive yet functional barrier to unauthorised vehicle access. They are ideal for use around pedestrian precincts, pavements, play and parking areas, as part of traffic calming measures, pedestrianisation schemes and as a deterrent to ram-raiders.

Finishes: for all posts galvanising is standard. Colour coated options available extra.

o.d. refers to outside diameter of the steel tubular body. Cap & rings of high grade, impact resistant, malleable cast iron, welded onto steel tube. Ground fixing is assisted by ground fixing spikes. Bollards can be supplied with flanges for bolting down. Details on request.

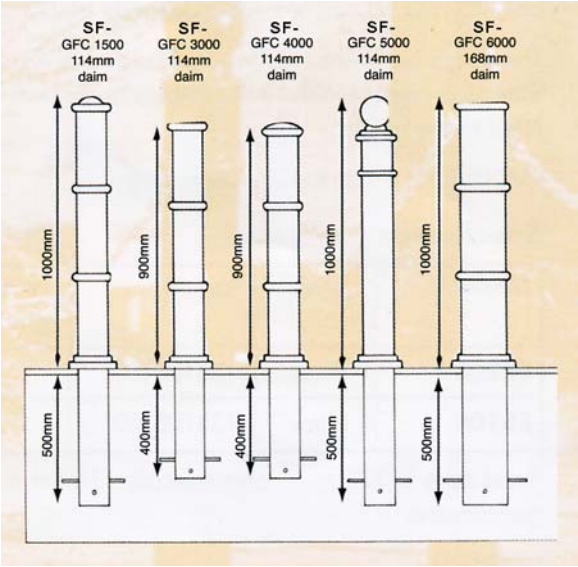

Model ref	o.d. (mm)	Wall thickness (mm)	Overall length (mm)	Above ground height (mm)	Below ground height (mm)	Weight (kg)
SF-GFC 2000 fixed	76	3.2	1400	1000	400	9
SF-GFC 2000s fixed	76	3.2	1400	1000	400	8
SF-GFC 800 fixed	114	3.6	800	500	300	12
SF-GFC 1700 fixed	114	3.6	1500	1000	500	19
SF-GFC 1500 fixed	114	3.6	1500	1000	500	19
SF-GFC 3000 fixed	114	3.6	1300	900	400	17
SF-GFC 4000 fixed	114	3.6	1300	900	400	17
SF-GFC 2R fixed	114	3.6	1400	1000	400	14
SF-GFC 5000 fixed	114	3.6	1500	1000	500	20
SF-GFC 7000 fixed	114	3.6	1500	1000	500	20
Lighthouse fixed	165	5.0	1500	1000	500	30
SF-GFC 6000 fixed	165	5.4	1500	1000	500	38

◀ ▶ Removable post RPP

Forms a rigid barrier when positioned. It is used to exclude the access of all but emergency and service vehicles from traffic-free zones and to prevent unauthorised access. Commonly found where access is only occasionally required, or required during daytime so posts can be locked in at night. To remove the post, the padlock (available extra) is unlocked, the pin is disengaged from the locking bracket on the underside of the ground plate and the post can be lifted out. Once clear, the flap closes flush with the ground leaving no projections or unprotected holes. Retaining pin and hinge pin of zinc plated mild steel.

◀ Security post type RSP removable security post

Similar to the standard removable post RPP, but suppled complete with a high security sliding bolt padlock and two keys and a hardened steel retaining pin. Ideal for providing a high security vehicle obstruction for car forecourts, driveways, perimeter and access points, thereby providing a physical, secure barrier to car theft. When the post is removed, the socket flap closes flush with the surrounding ground level.

▶ Removable wooden bollard

- Common size 1500 x 150 x 150mm
- 4-way weather top
- With or without reflectors

◀ ▼ Buckingham bollard

A quality post product designed for prestige locations. Key operated removable and rigid posts are also available. With chain eyes at extra cost.

Specification:
Strong mild steel tubular construction
Dimensions: Length 1100mm overall (both types). Above ground height 900mm. Diameter of steel tube 100mm OD x 5mm thick.
Finish: Black powder coated (other colours available on request).
Weight: 19kg
Alternative: Chain eyes are available at extra cost.

▶ Telescopic Mole post

The mole post is a low cost solution for providing effective security for a variety of applications, garage forecourts, drives and car parks. It can also be used for site demarcation i.e. cordoning off areas. The post is designed to retract into the ground when not in use; it is manually raised into its protecting position and secured by means of a padlock at the base.

Specification:
Section of body: 100mm x 100mm steel tube
Height above ground: 610mm (open)
Length of unit o/a: 785mm (closed)
Finish: Hot dipped galvanised
Weight: 25Kgs
Alternative: Rigid version available

Padlock can be supplied at an extra cost.

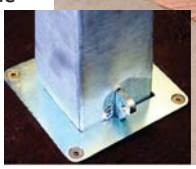

▶ Telescopic parking post

This post is an alternative to the telescopic mole post, with the padlock (not supplied) being situated at the top of the post, not at the base, for ease of operation.

Padlock can be supplied at an extra cost.

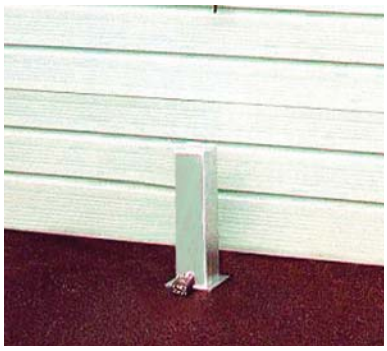

▲ Baby Mole post

As the name implies this is a smaller version of the mole post and is a very cost-effective way of protecting garage doors and gates, etc.

Specification:
Section of body: 100mm x 100mm steel tube
Height above ground: 310mm (open)
Length of unit o/a: 470mm (closed)
Finish: Hot dipped galvanised
Weight: 12Kgs
Alternative: Rigid version available

Padlock can be supplied at extra cost.

◀ Lockable telescopic parking post

This is similar to both the Mole and telescopic parking post but is superior in so much that it incorporates an integral pushlock and can only be lowered or raised using a T-key. The central stem can be removed and replaced if damaged or in need of servicing. When the post is in the lowered position it is protected by an 8mm thick steel hinged plate strong enough to enable vehicles to pass over without damage.

Specification:
Section of body: 100mm x 100mm steel tube
Height above ground: 610mm (open)
Length of unit o/a: 795mm (closed)
Finish: Hot dipped galvanised
Weight: 30Kgs
Alternative: Rigid version available

Supplied with 2 No. keys (further keys can be supplied at an extra cost). Locks can be keyed alike or to differ.

▲ Round telescopic post

A more aesthetically pleasing alternative to the telescopic parking post, but circular rather than square. Can be used around garage forecourts and car parks in various colours to suit the surroundings. The post can be removed and replaced when damaged or in need of servicing.

Specification:
Section of body: 101.6mm dia steel tube
Height above ground: 610mm (open)
Length of unit o/a: 795mm (closed)
Finish: Outer body hot dip galvanised, post sprayed nylon.
Weight: 28Kgs
Alternative: Rigid version available

Padlock can be supplied at extra cost.

▶ Telescopic traffic stopper

This is a larger version of the telescopic parking post and is therefore much stronger to fulfil a role where a substantial post is required to deter ram raiders, etc.

Specification:
Section of body: 120mm x 120mm steel tube
Height above ground: 660mm (open)
Length of unit o/a: 914mm (closed)
Finish: Hot dipped galvanised
Weight: 40Kgs
Alternative: Rigid version available

Padlock can be supplied at an extra cost.

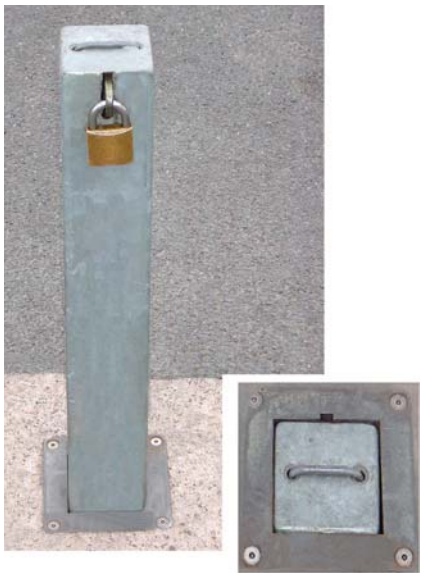

SF-RT/R14

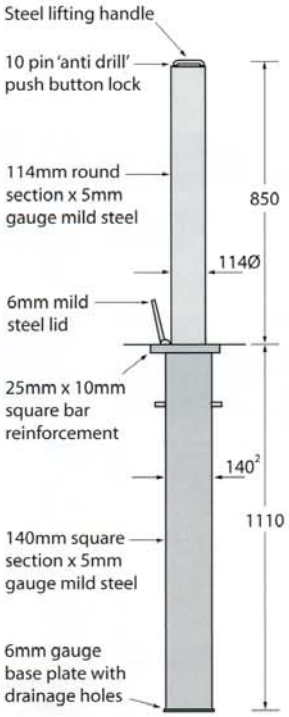

Mild steel to BS1449.
Galvanised to BSENISO 1461 (1999)

◀ **MATCHING STATIC POST RB114**

SF-RT/R14/HD

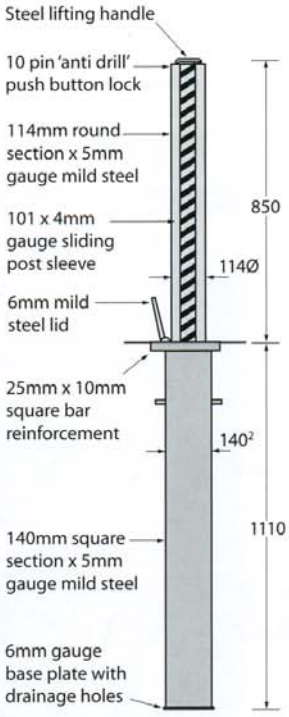

Mild steel to BS1449.
Galvanised to BSENISO 1461 (1999)

◀ **MATCHING STATIC POST RB114AR**

SF-RT/R5

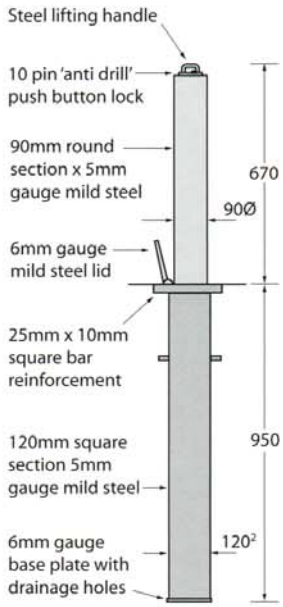

Mild steel to BS1449.
Galvanised to BSENISO 1461 (1999)

◀ **MATCHING STATIC POST RSPR8**

SF-RT/RD4

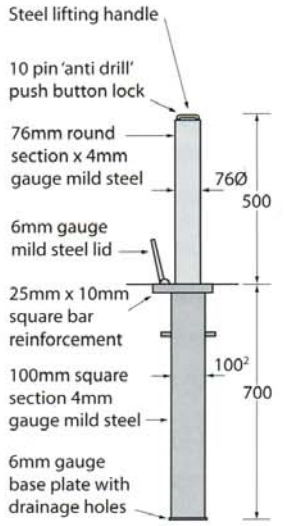

Mild steel to BS1449.
Galvanised to BSENISO 1461 (1999)

◀ **MATCHING STATIC POST RS/D4**

All measurements in mm

SF-RT/SQ8HD

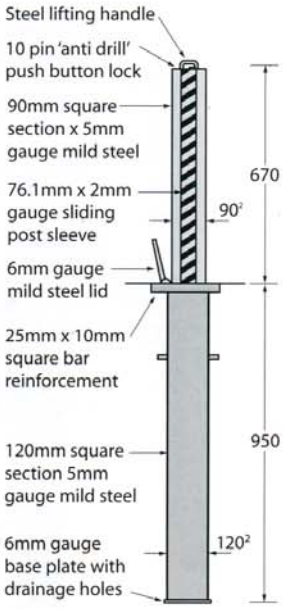

Mild steel to BS1449.
Galvanised to BSENISO 1461 (1999)

◀ **MATCHING STATIC POST RSPSQ8**

SF-RT/SQ5

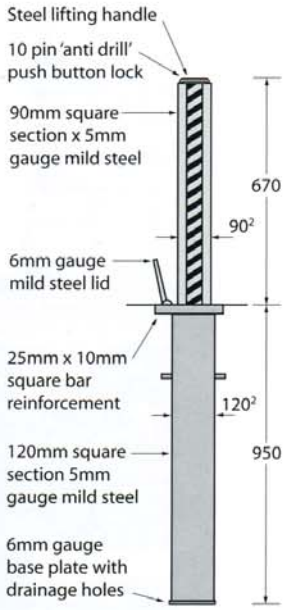

Mild steel to BS1449.
Galvanised to BSENISO 1461 (1999)

◀ **MATCHING STATIC POST RSPSQ8**

SF-RT/R8/HD

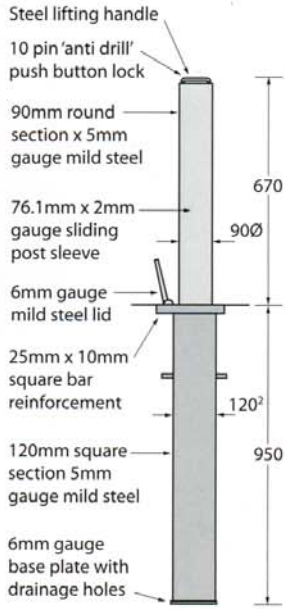

Mild steel to BS1449.
Galvanised to BSENISO 1461 (1999)

◀ **MATCHING STATIC POST RSPR8**

SF-RT/SS5

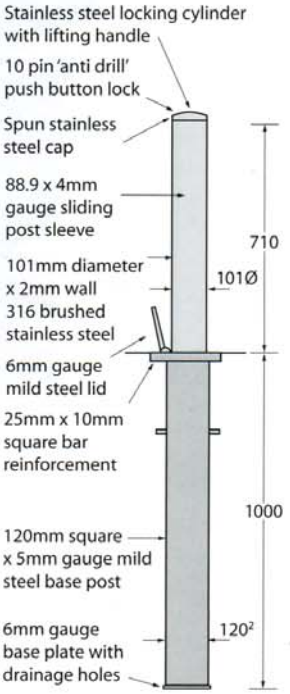

Stainless steel grade 316.
Mild steel to BS1449.
Galvanised to BSENISO 1461 (1999)

◀ **MATCHING STATIC POST SSB01**

All measurements in mm

Anti Ram-Raid Bollards

◀ ▼ Telescopic anti ram-raid post

This extremely strong post is very effective in protecting warehouses, shops, stores and property against ram-raiders. It has been approved by both Police and local government authorities and recommended by insurance companies.

The unit is secured by a padlock situated inside the flanges to make it difficult for access. Raising and lowering can be achieved by using a T-key. The post can be removed and replaced when damaged or in need of servicing, reducing the time needed to excavate.

Specification:
Section of body: 127mm x 76mm R.S. joist
Height above ground: 720mm (open)
Length of unit o/a: 950mm (closed)
Finish: Hot dipped galvanised
Weight: 40Kgs
Alternative: Rigid version available

Padlock can be supplied at an extra cost.

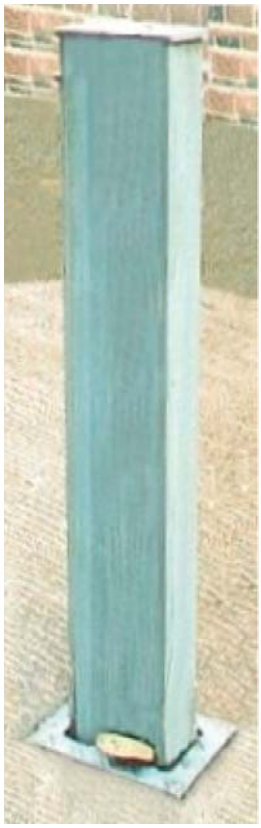

▶ Fixed anti ram bollards

We have introduced an anti ram-raid option to our selection of fixed bollards. The RSJ can be welded to the inside of any 114mm and 168mm diameter fixed bollard to make it ram-raid resistant.

Newtown bollard

Plain galvanised flat top 1500 x 140mm

L to R: 76mm, 101mm, 127mm and 152mm plain steel galvanised

Bollards painted to order

▲ ▶ ▼ Range of mild steel bollards

Available in round tube or square section. Adding security to your area as the bollards are exceptionally strong and will not fracture on impact. Ideal for ram-raid deterrance, protected parking and pedestrian walkways.

Steel bollards can be manufactured in a wide range of sizes and lengths - plain, stepped or with rings and castings. They are produced in galvanised form as standard but can be supplied painted or powder coated to most BS or RAL colours.

We carry some sizes in stock for quick delivery. For extra strength steel bollards can be filled with concrete on site.

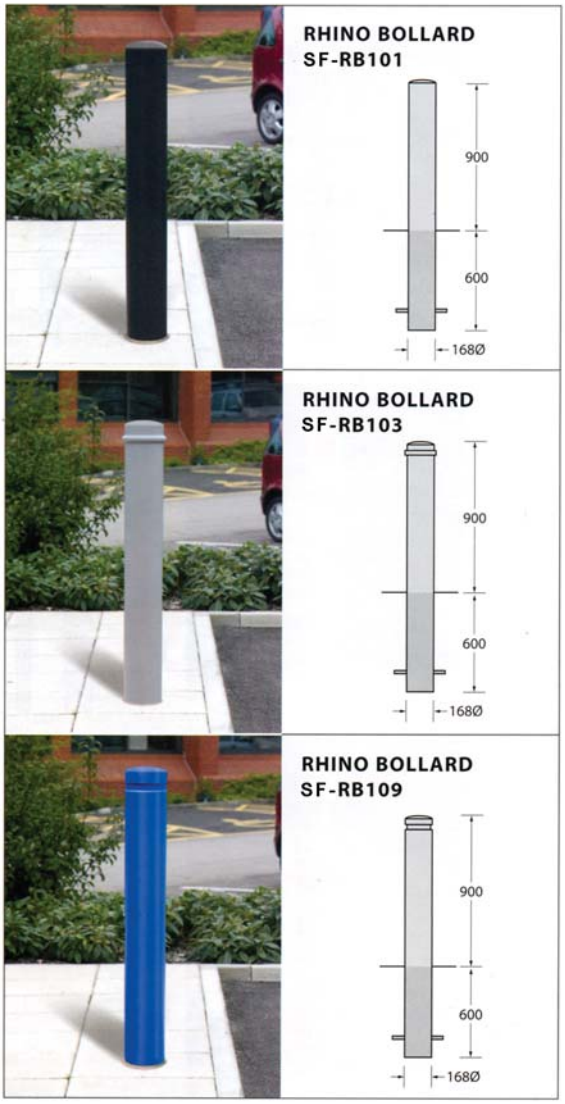

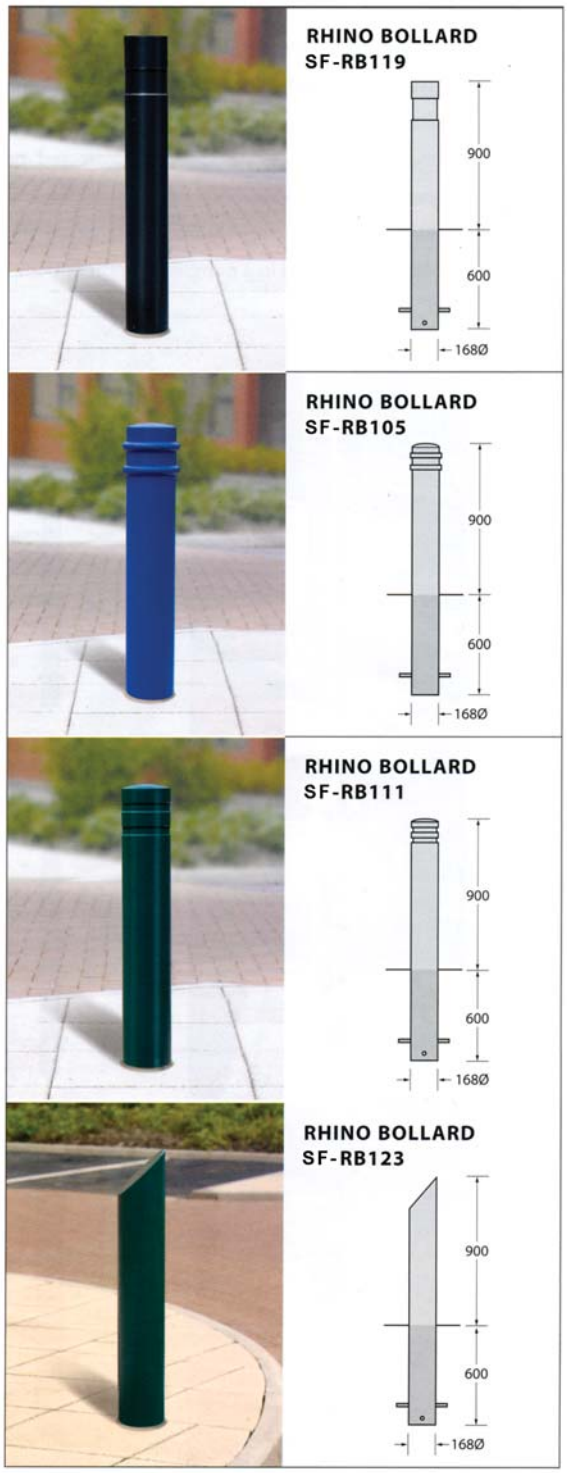

A selection of bollard designs available to order. Bollards available in 76, 89, 101, 114, 127, 139, 152, 168 and 193mm diameters.

All measurements in mm

Stainless Steel Bollards

Range of stainless steel bollards

Stainless steel bollards provide a modern look to street furniture. As stainless steel is exceptionally strong and requires low maintenance, these bollards are ideal for protected parking and pedestrian areas.

Available in a wide range of sizes, styles and finish options to suit a variety of modern/contemporary scenes. All stainless steel bollards can be produced to clients' specific requirements.

All measurements in mm

RHINO BOLLARD SF-RS001

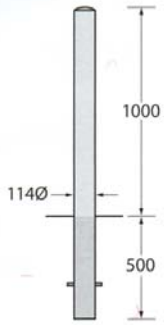

RHINO BOLLARD SF-RS005

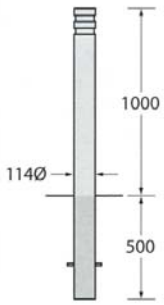

RHINO BOLLARD SF-RS007

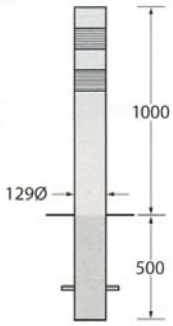

RHINO BOLLARD SF-RS004

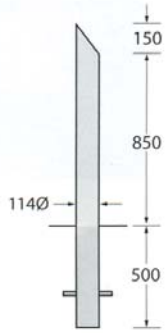

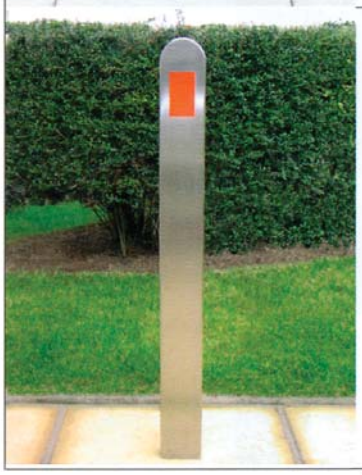

RHINO BOLLARD SF-RS006

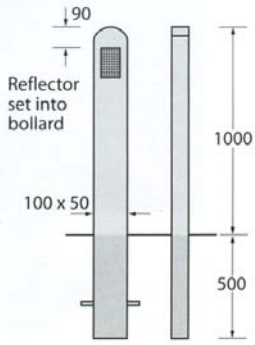

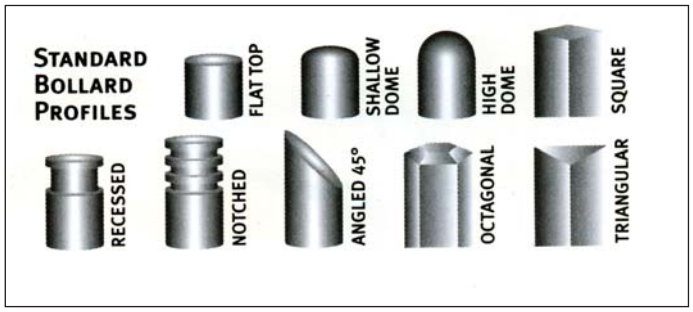

SF-SS253

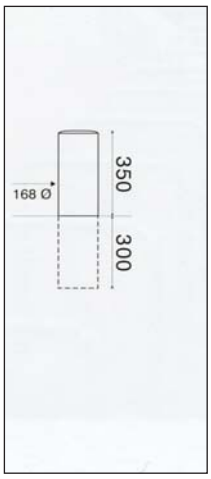

SF-SS254

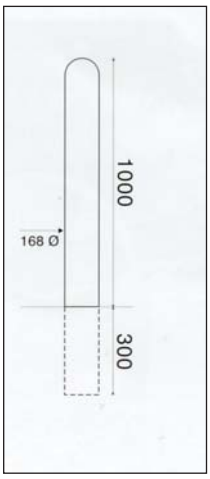

SF-SS255

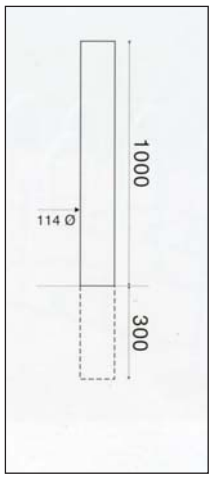

All measurements in mm

Decorative Cast Iron Bollards

▼ Range of cast iron bollards

A comprehensive range of cast iron bollards is available, usually supplied in a primed finish ready for final coat of paint on site. Pictured below are our most popular bollards which are available from stock.

▼ Removable bollard

With sleeve for concreting into ground incorporating flush fitting cover when in closed position. Also available without standard socket.

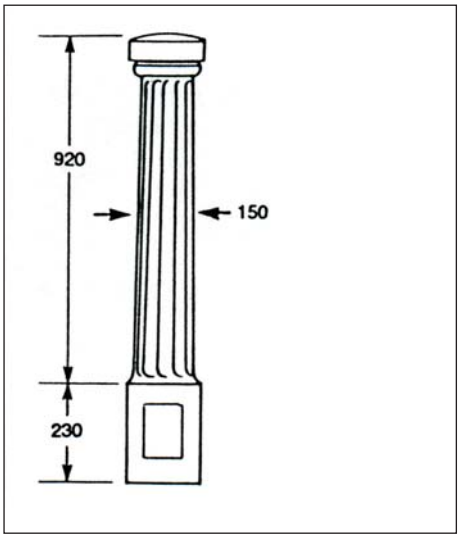

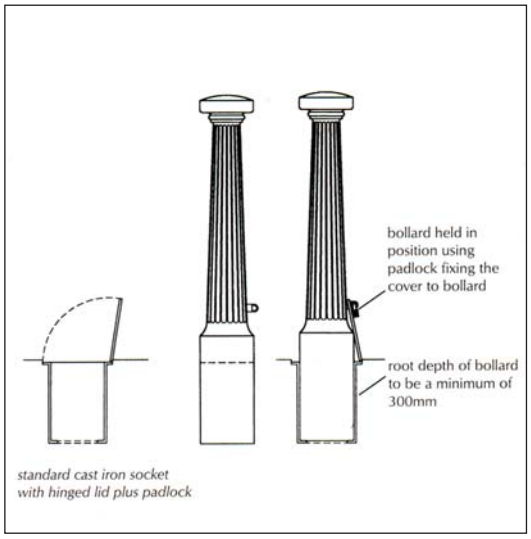

▲ Wargrave bollard

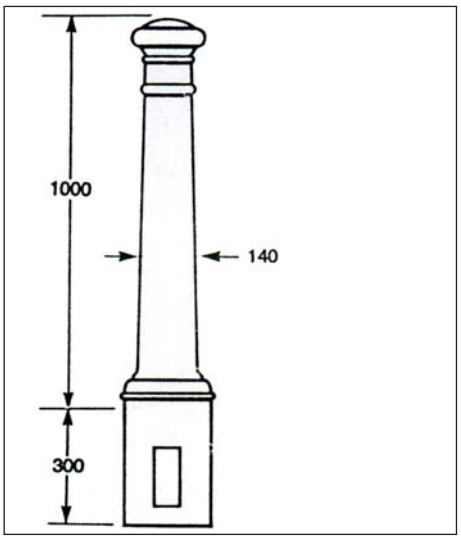

▶ Manchester bollard

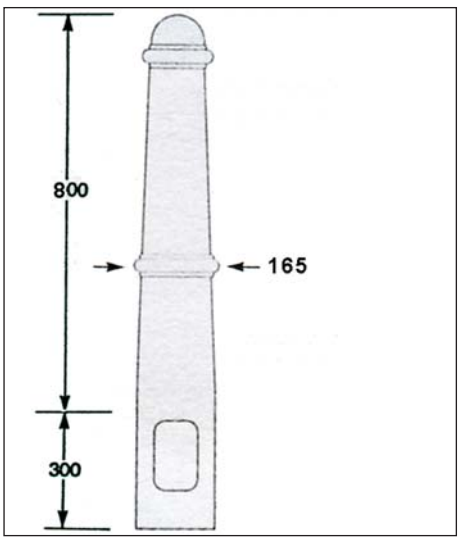

◀ Twyford bollard

All measurements in mm

▶ ▼ Further selection of cast iron bollards

All measurements in mm

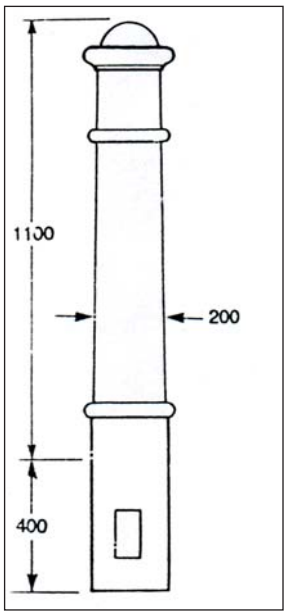

SF-106

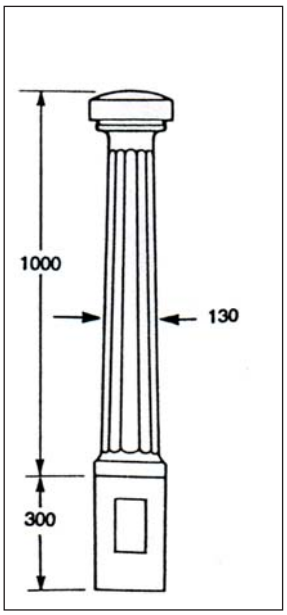

SF-105

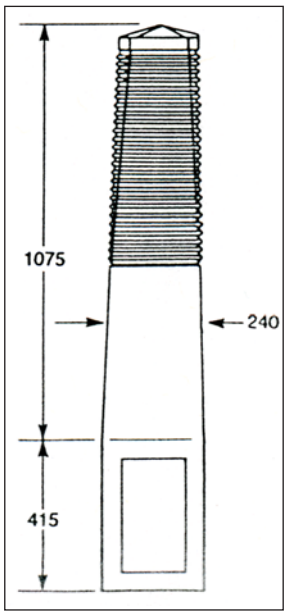

SF-123

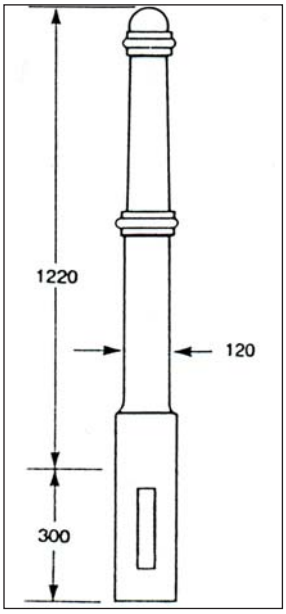

SF-121

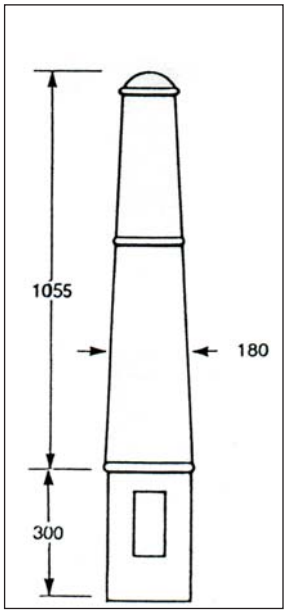

SF-120

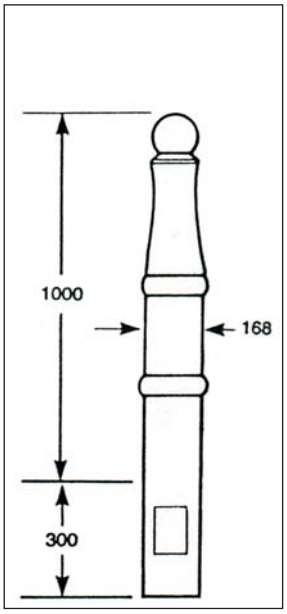

SF-108

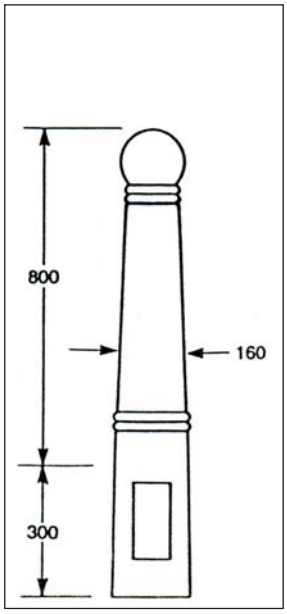

SF-122

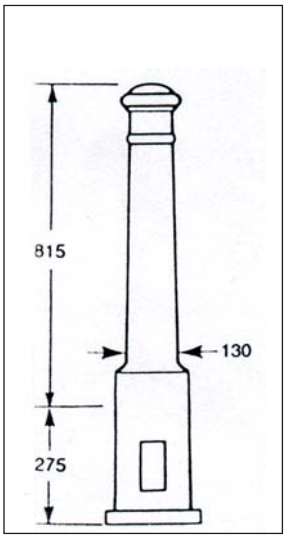

SF-111

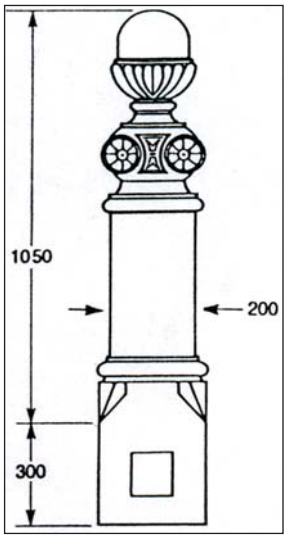

SF-125

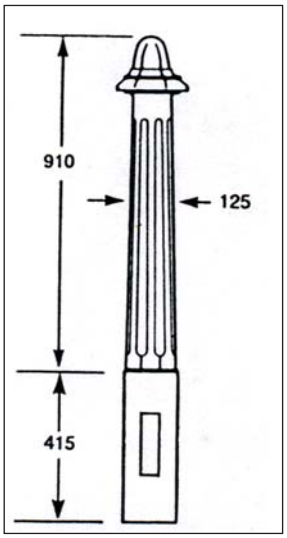

SF-102

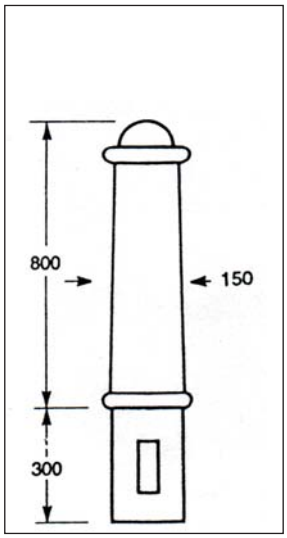

SF-107

Pavement Protection Bollards

Range of pavement protection bollards

These bollards, when sited correctly, are ideal for protection of kerbs, walls and pavements by deflecting the wheel of a vehicle away from the area. The bollards are made from ductile cast iron to resist damage upon impact.

Policehat bollard

Available in full, three-quarter and half sections.

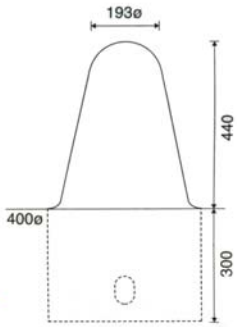

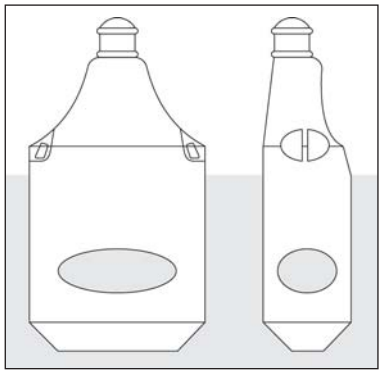

Kerbside bollard

This shaped bollard is designed to integrate with the kerb, taking up little pavement area so leaving pavements free for pedestrians.

Skislope bollard

Designed with a gradual slope to help deflect vehicles away from the pavement.

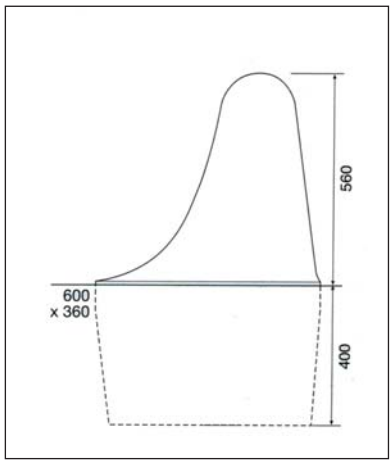

All measurements in mm

◀ Sprung boundary post

The sprung boundary posts are similar to the standard fixed boundary post but incorporate a heavy duty spring towards the bottom of the post thus enabling it to withstand light to medium impacts from vehicles. Used for marking boundaries of parking spaces, siting between hinged posts and for protection of walls and buildings. After impact the spring allows the post to return to the near vertical position - minimising damage to the post and to the vehicle.

The sprung boundary post can spring to approximately 30° from the vertical position.

Specification:

- Made of mild steel tube 48mm o.d. 750mm above ground. Ragged version 240mm below ground
- Flanged version requires 3 No. 12mm bolts. Circular flange of mild steel, diamater 134mm, 6mm thick
- Weather cap of black polypropylene
- Galvanising is standard finish. Colour coated options available at extra cost

Installation:

- Flanged posts should be bolted to a suitable existing surface, preferably concrete
- Ragged posts should be cast in a concrete foundation approx 300mm cube. The ragged ends ensure a good anchorage into concrete

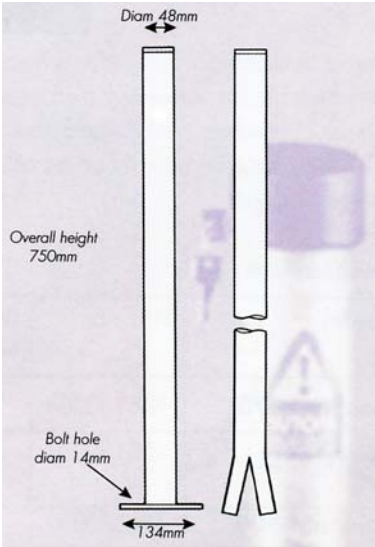

▼ Boundary post

Boundary posts are fixed posts with either ragged ends for casting in or flanged ends for bolting down. They can be positioned between hinged posts to prevent unauthorised parking, or used as a permanent post by themselves to mark lateral limits, or with chain and eyelets to block access points.

▶ ▼ Rubber bollard

The flexible bollard which can bend down to 90° without normally being damaged, it will in time return to its original position. Low speed impacts will cause virtually no damage to the bollard, therefore considerable replacement costs are avoided.

Extremely robust, durable and maintenance free, the Universal and Konus are made from recycled granulated rubber. The bollards are flexible with no sharp edges, making them safe for pedestrians, cyclists and drivers. 200kg force needed to bend to 45°.

▲ Universal rubber bollard

Installation:

Excavate hole 780mm deep, 300mm diameter, insert steel tube, pack sand to required depth then place bollard in hole and pack sand around to secure it.

▲ Konus rubber bollard

Installation:

Simply drill and bolt down on to a suitable concrete surface. 6x12mm bolts available at extra cost.

Model	Finish	Height above ground (mm)	Below ground depth (mm)	Diameter at base (mm)	Extra info
Universal	Black	1000	340	140	Steel socket 780mm long x 160mm od, Weight 25kg
Konus	Black	740	n/a	140	Flange height 50mm x 305mm diameter Weight 16kg + 1.5kg for flange

Recycled Bollards

Range of 100% recycled bollards

Street Furnishings range of recycled bollards offers a cost-effective, long lasting rot and maintenance free solution to your traffic calming, general delineation and pedestrian safety schemes with a selection of design styles to suit most situations, from city centre to rural locations.

Ornamental range

Amsterdam

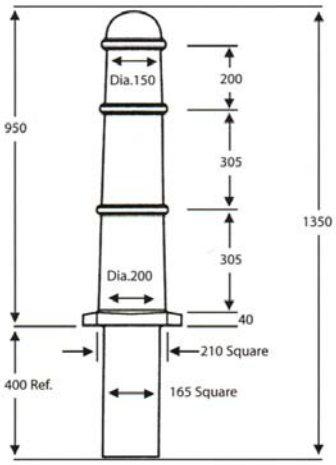

Dimensions: 150/200 Dia x 1350mm

Unit Weight: 30kg

Crest

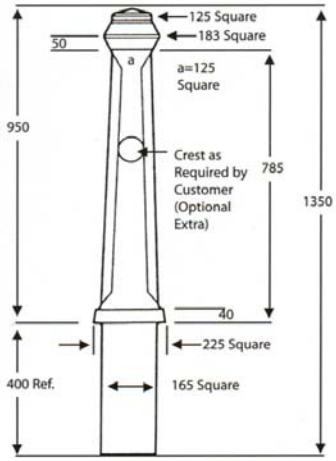

Dimensions: 150/200 Dia x 1350mm

Unit Weight: 29kg

Tudor

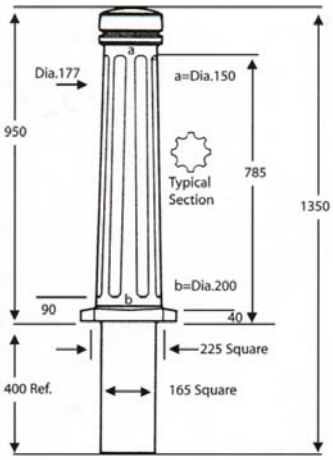

Dimensions: 150/200 Dia x 1350mm

Unit Weight: 29kg

Octagonal

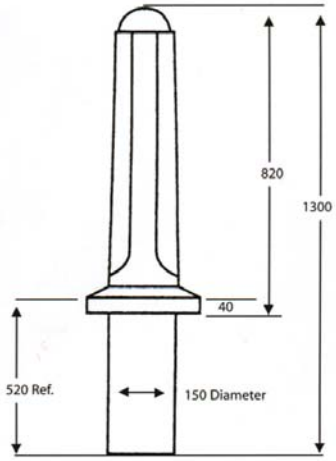

Dimensions: 175 x 175 x 1300mm

Unit Weight: 22kg

Bump bollard

- Made from 100% recycled thermoplastic
- Absorbs impact of slow moving vehicles and returns to original position
- Easily installed
- Available in a selection of existing designs
- Ideal for parking areas and loading bays

All measurements in mm

▼ Contemporary range - square base

▼ Pyramid top

Feature:
Pyramid Top

Base:
Square

Overall Dimensions:
145 X 145 X 1460mm

Unit Weight: 27kg

Order Code: P/S

▼ Pyramid top - removable

Feature:
Diamond Top - Removable

Base:
Square

Dimensions:
145 x 145 x 780mm

Unit Weight: 15kg
(bollard only)

Order Code: PR/S

Special Details:
Concrete Locking Tool and ground base also supplied.

▼ Domed top - octagonal

Feature:
Domed Top Octagonal Body

Base:
Square

Dimensions:
145 x 145 x 1500mm

Unit Weight: 27kg

Order Code: DO/S

▼ Domed top

Feature:
Domed Top

Base:
Square

Dimensions:
145 x 145 x 1500mm

Unit Weight: 24kg

Order Code: D/S

▼ Classical range - circular base

▼ Domed top

Feature:
Domed Top

Base:
Circular

Dimensions:
120 or 150 dia x
1100/1300/1500mm

Unit Weight: 15kg/m

Order Code: D/C

▼ Chamfered top

Feature:
Flat Top

Base:
Circular

Dimensions:
150 dia x
1100/1300/1500mm

Unit Weight:15kg/m

Order Code: F/C

▼ Flat top

Feature:
Chamfered Top

Base:
Circular

Dimensions:
150 dia x
1100/1300/1500mm

Unit Weight: 15kg/m

Order Code: C/C

▼ Groove options

The Contemporary & Classical ranges can be supplied either blank or with grooves. The standard groove specification is detailed below. Non-standard grooves available on request.

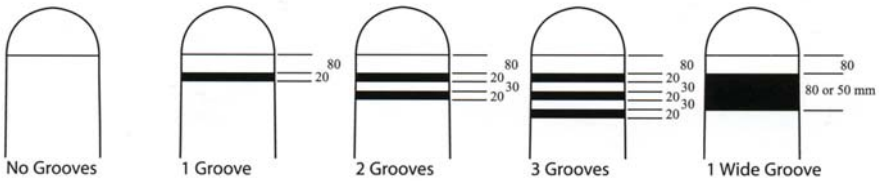

Ground fixing recommendations

Bollard base is secured permanently in a concrete bed, using an optional hole and peg feature.

Reflective grades & colours

Class II grade (red or white) as standard; higher grades and alternative colours available on request.

Polyurethane Bollards

Range of polyurethane bollards

Street Furnishings supply a range of polyurethane bollards, all with a polymer casting over an internal steel core. These combined materials and construction give the bollards inherent structural strength, but also will not shatter on impact. Minimum maintenance is required as the bollards will not rust as they are made from a self-coloured flame retardant engineering grade polymer.

Many designs are available to order in most BS or RAL colours. Gold banding and reflective finishes can be supplied to your requirements.

Streetwise bollard

"The bollard that takes care of itself".

This bollard has a smooth basic design which, once installed, requires zero maintenance. Highly resistant to accidental and deliberate damage.

Dimensions:
Typical height: 1000mm
Typical root depth: 300mm
Typical diameter: 150mm

Available in standard black and a range of popular colours.

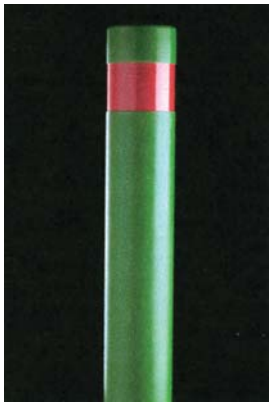

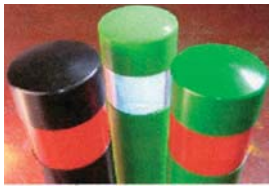

Alnwick

Height: 395 Max dia: 175

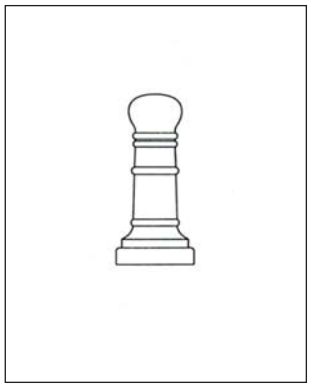

Medium Alnwick

Height: 600 Max dia: 175

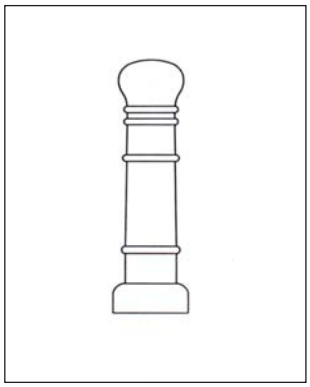

Large Alnwick

Height: 900 Max dia: 300

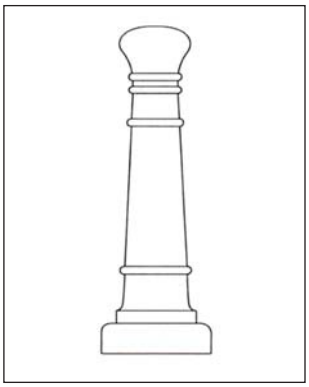

Ashby

Height: 785 Max dia: 210

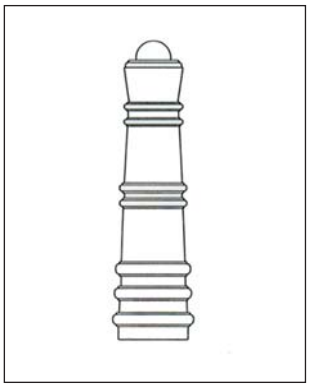

Ashton

Height: 900 Square at base: 150

Barnstaple

Height: 983 Across flats on base: 130

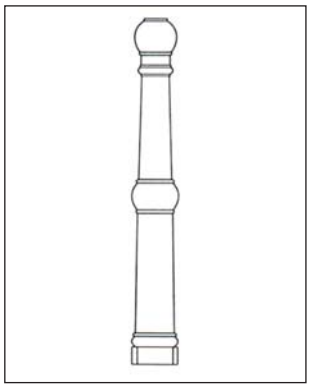

Birmingham

Height: 1034 Across flats on base: 200

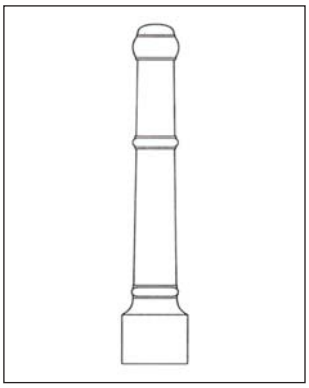

All measurements in mm

▼ Borough
Height: 1134 Max dia: 200

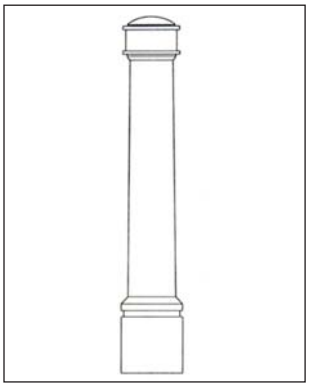

▼ Brent
Height: 900 Max dia: 157

▼ Bristol
Height: 895 Max dia: 160

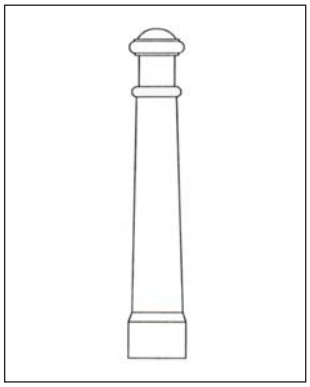

▼ Bury
Height: 815 Max dia: 188

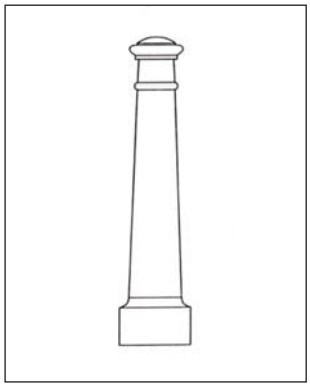

▼ Edge protector
Height: 995 Max dia: 185

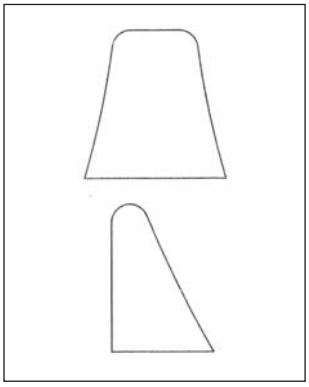

▼ Carronade
Height: 1140 Max dia: 245

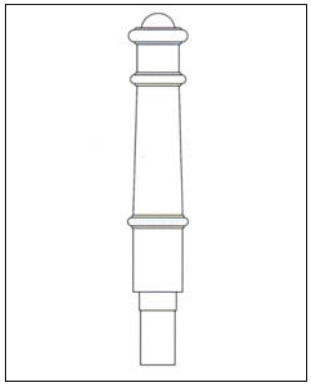

▼ Chorley
Height: 1251 Max dia: 225

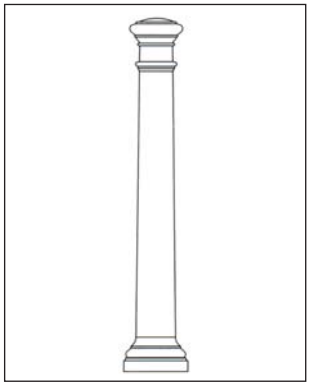

▼ Clapham
Height: 1000 Max dia: 125

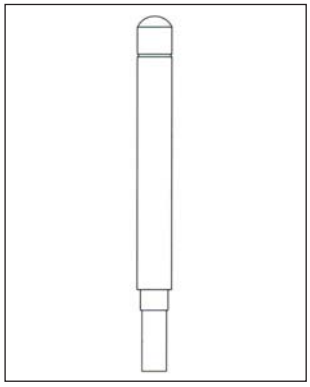

▼ Croydon
Height: 950 Max dia: 201

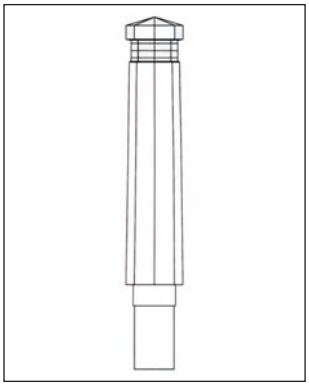

▼ Darlington
Height: 1095 Max dia: 190

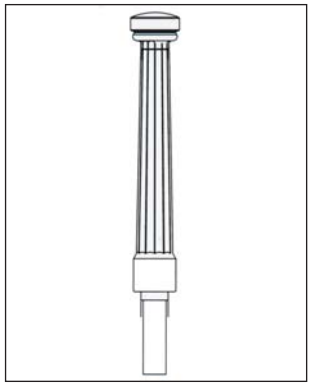

▼ Daventry
Height: 940 Max dia: 210

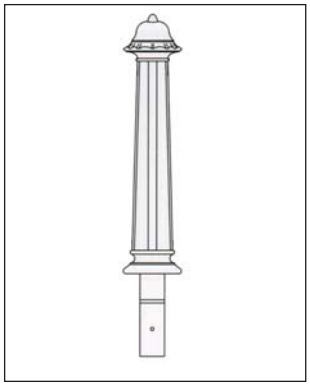

▼ Deansgate
Height: 1140 Max dia: 100

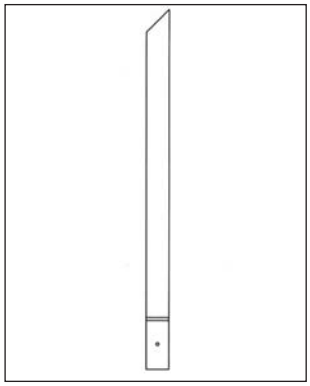

▼ Bisley
Height: 760 Max dia: 155

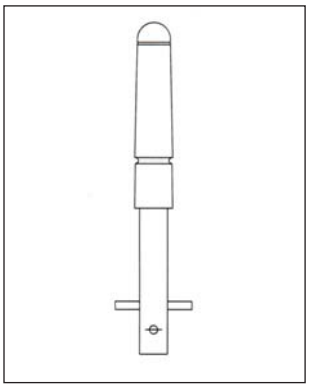

▼ Durham
Height: 930 Max dia: 200

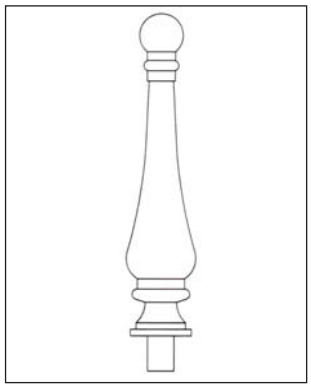

▼ Earsdon
Height: 900 Max dia: 120

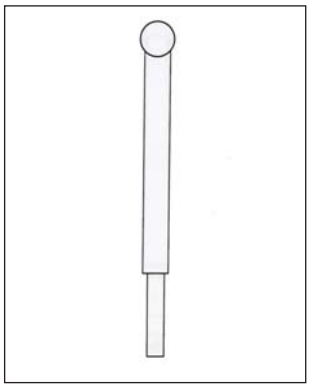

▼ Eastbourne
Height: 1178 Max dia: 231

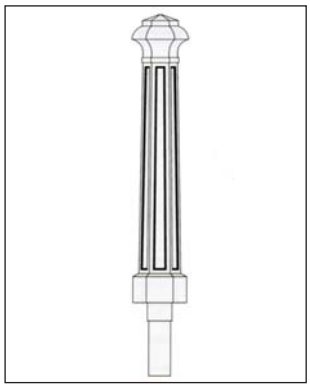

All measurements in mm

Polyurethane Bollards *(continued)*

Eton
Height: 970 Max dia: 155

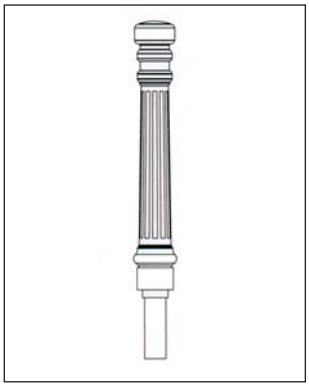

Ealing
Height: 1000 Max dia: 200

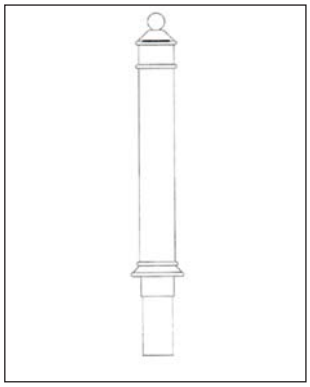

Keir
Height: 950 Max dia: 200

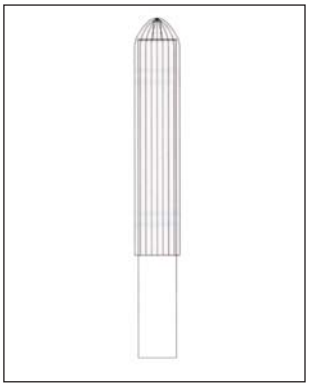

Kirklees
Height: 995 Max dia: 175

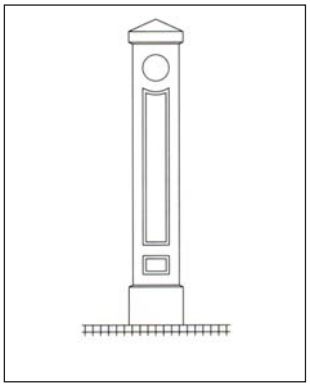

Large Norwich
Height: 1075 Max dia: 155

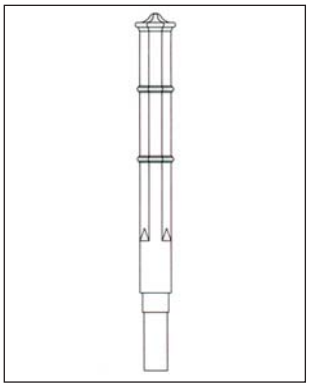

Leytonstone
Height: 917 Max dia: 200

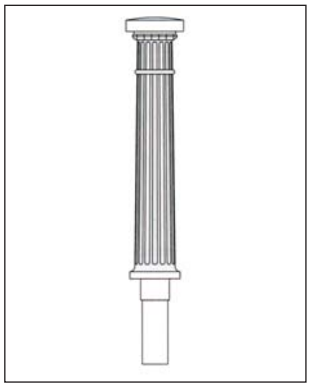

Manchester Millenium
Height: 900 Max dia: 250

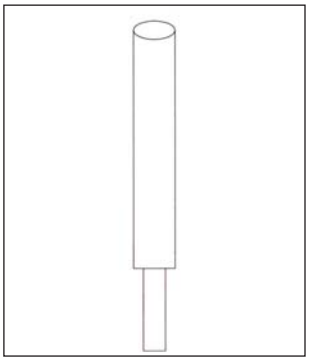

Mersey
Height: 1000 Max dia: 160

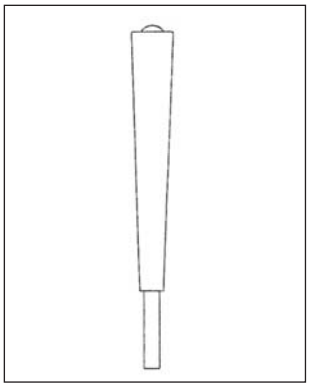

Oldham
Height: 965 Max dia: 225

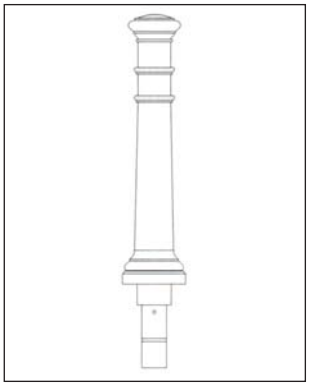

Plymouth
Height: 1220 Max dia: 150

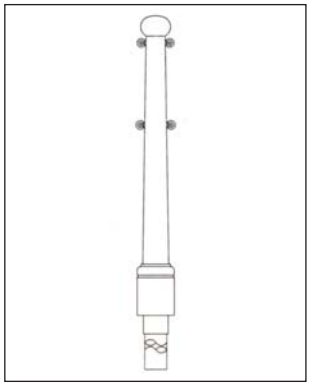

Radley
Height: 900 Max dia: 180

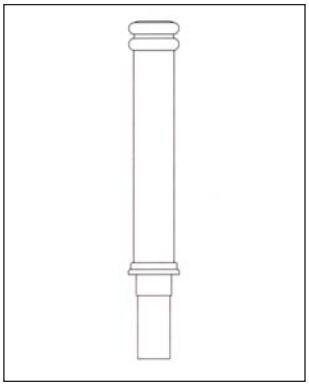

Red Route
Height: 950 Max dia: 156

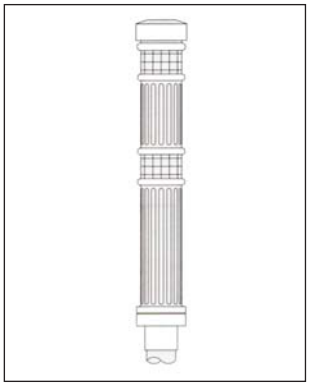

Horsham
Height: 800 Max dia: 250

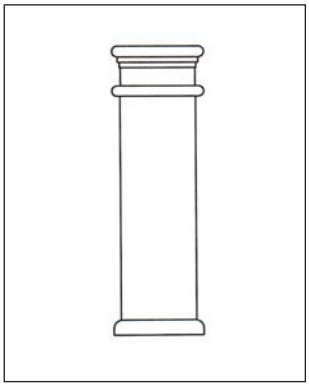

Islington
Height: 990 Max dia: 170

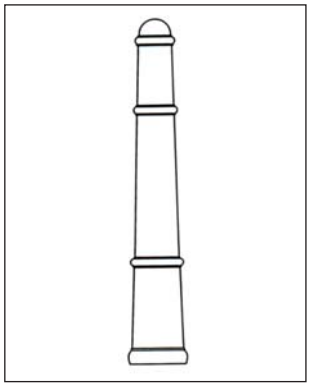

Kristiansand
Height: 750 Max dia: 220

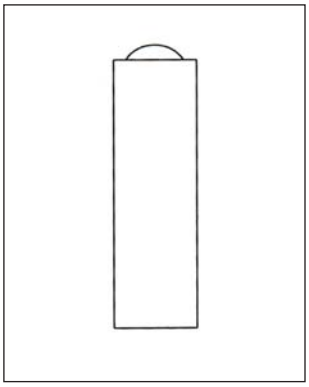

Langbaurgh
Height: 890 Max dia: 310

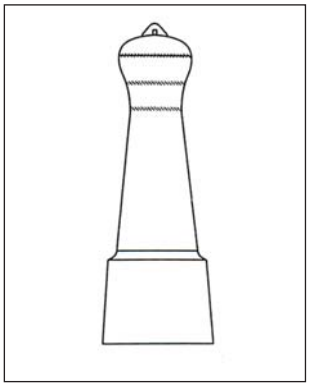

All measurements in mm

▼ Large Cannon
Height: 1000 Max dia: 140

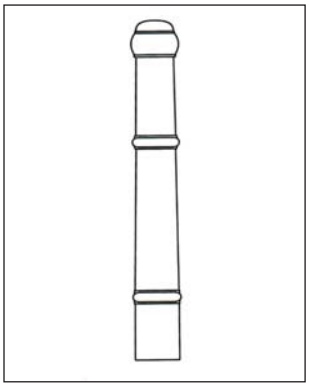

▼ Leicester
Height: 1000 Max dia: 140

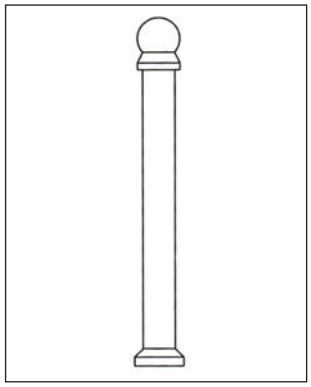

▼ Leicester Heavy
Height: 1000 Max dia: 156

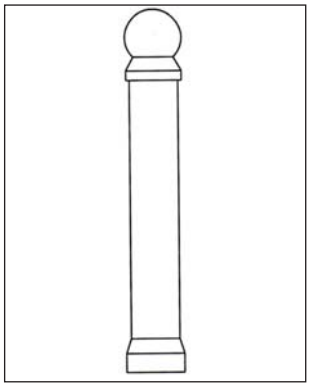

▼ Maidenhead
Height: 918 Max dia: 165

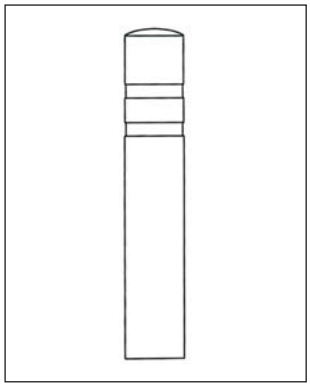

▼ Manchester
Height: 965 Max dia: 225

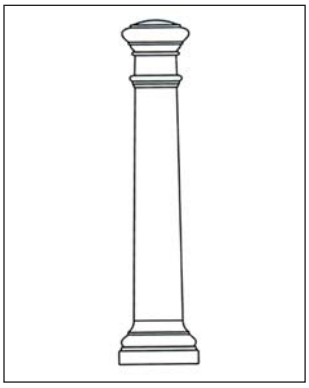

▼ Melton Mowbray
Height: 960 Max dia: 188

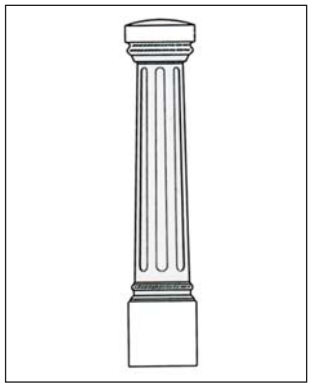

▼ Morpeth
Height: 900 Max dia: 145

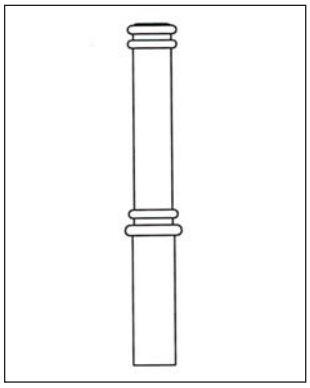

▼ Newcastle
Height: 1000 Max dia: 168

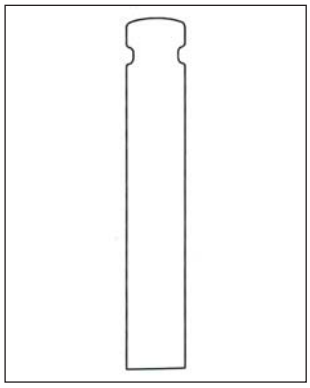

▼ Gateshead
Height: 845 Max dia: 190

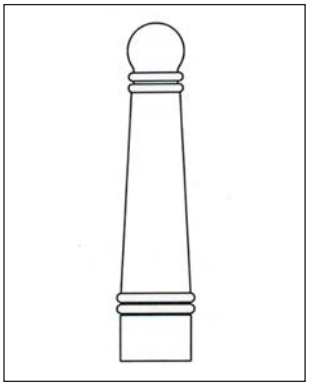

▼ Gravesham
Height: 1102 Max dia: 185

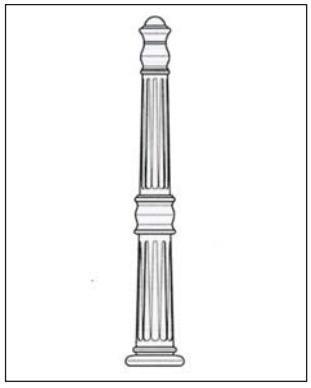

▼ Hackney
Height: 970 Max dia: 170

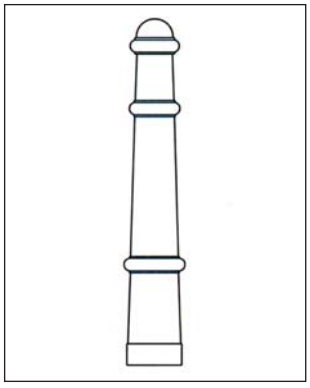

▼ Haringey
Height: 947 Max dia: 167

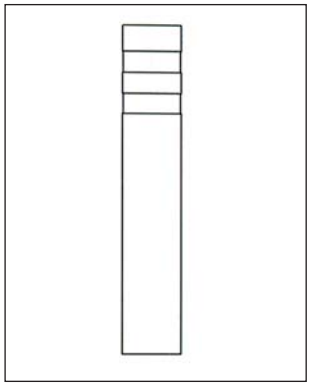

▼ Havant
Height: 1220 Max dia: 180

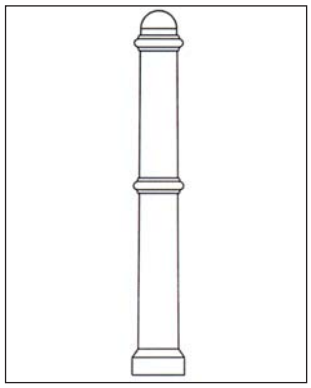

▼ Hendon
Height: 900 Max dia: 155

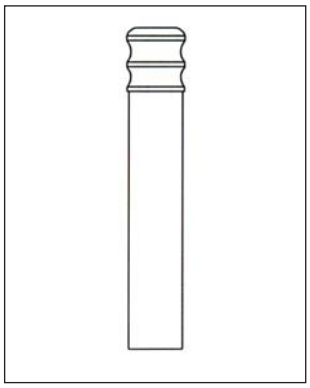

All measurements in mm

▼ Hexham
Height: 917 Max dia: 200

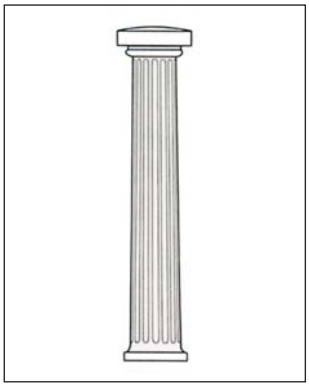

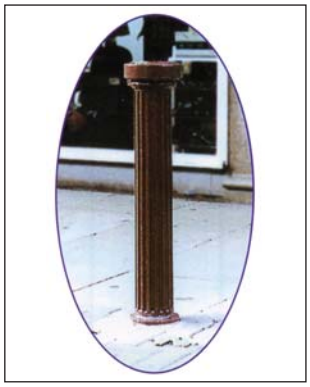

▼ Hexham
Octagonal base
Height: 917 Across flats on base: 200

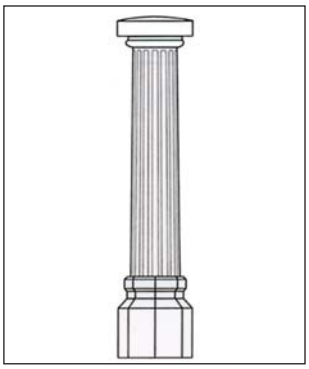

▼ Modified Hexham
Height: 917 Max dia: 200

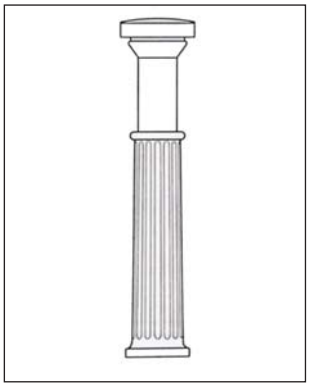

▼ Camden
Height: 1075 Rect. base: 246 x 142

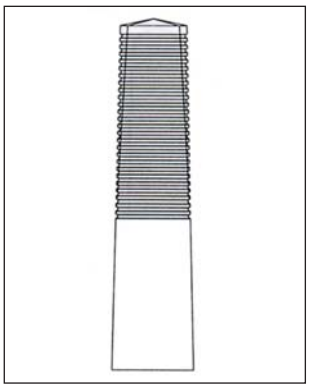

▼ Capstan
Height: 900 Max dia: 120

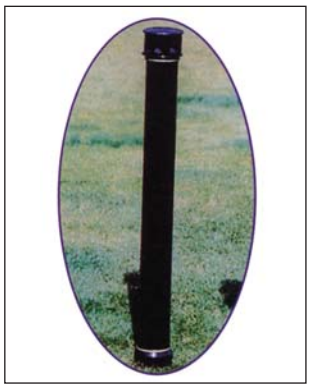

▼ Capital
Height: 1050 Max dia: 240

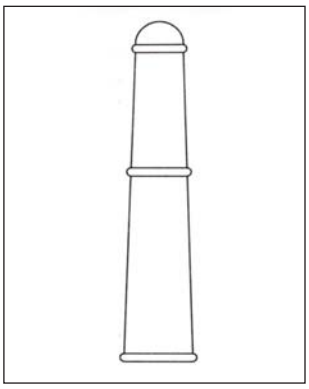

▼ Cardiff
Height: 1000 Across flats on base: 220

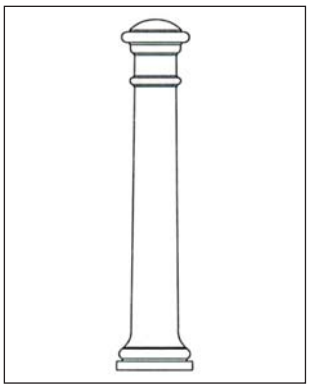

▼ Cheltenham
Height: 1130 Max dia: 165

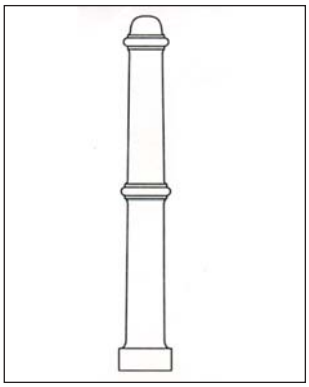

▼ Ext. Cheltenham
Height: 1220 Max dia: 165

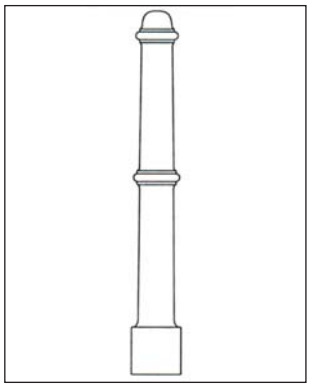

▼ Chertsey
Height: 1000 Max dia: 156

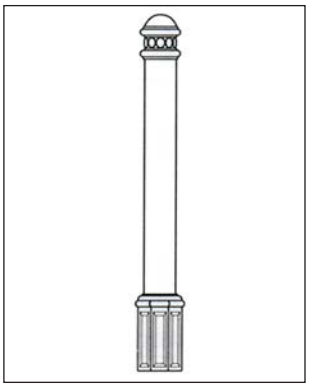

▼ City
Height: 796 or 950 Max dia: 145

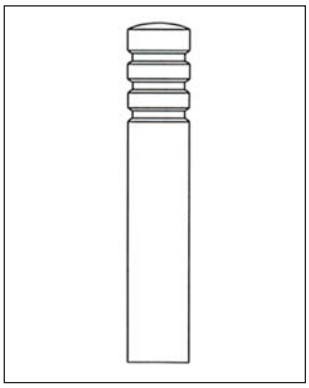

▼ Coldstream folddown
Height: 745 Max dia: 65

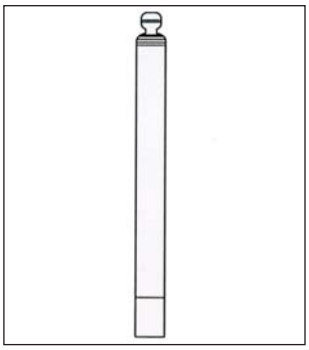

▼ Conservation
Height: 1110 Across flats on base: 150

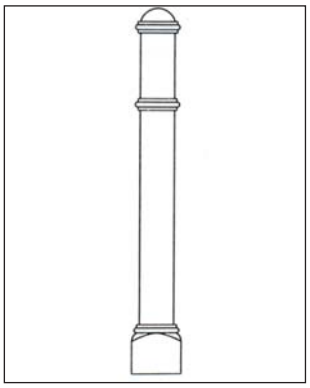

All measurements in mm

▼ Cornwall
Height: 1095 Max dia: 152

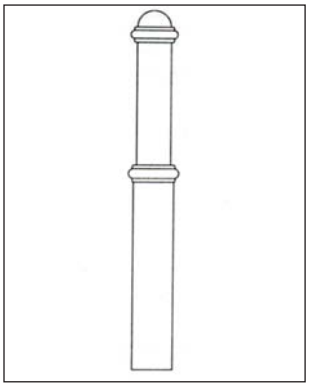

▼ Deal
Height: 1000 Max dia: 125

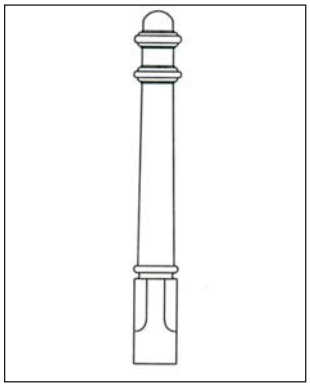

▼ Delaval
Height: 800 Max dia: 182

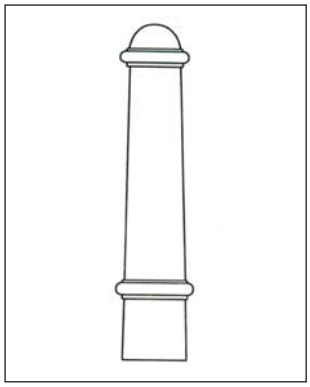

▼ Dewsbury
Height: 920 Max dia: 150

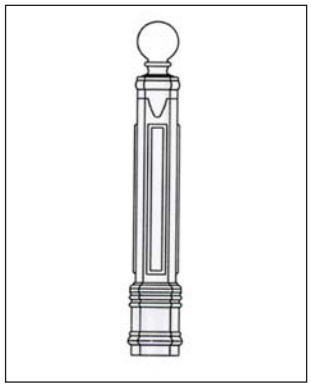

▼ Dudley
Height: 1155 Across flats on base: 222

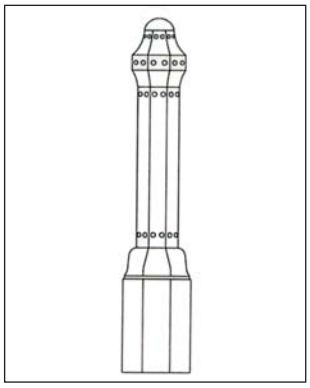

▼ East Sussex
Height: 915 Max dia: 168

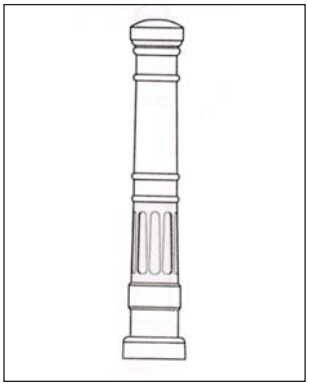

▼ Edge bollard
Height: 900 Elliptical sect: 130x60

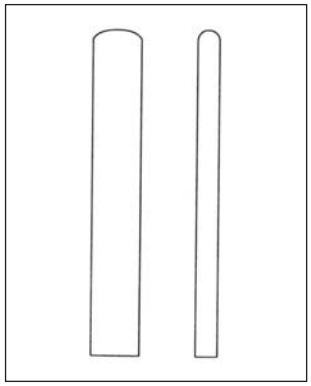

▼ Fort William
Height: 990 Max dia: 160

▼ Fusilier fold down
Height: 745 Max dia: 65

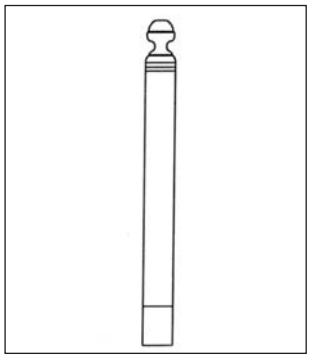

▼ Newcastle fluted
Height: 1000 Max dia: 168

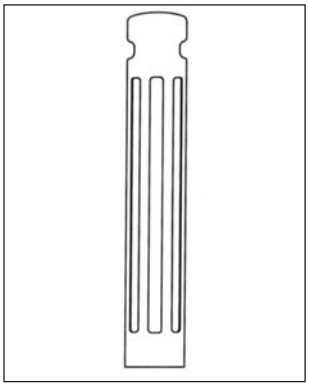

▼ Old Camden
Height: 1205 Across flats on base: 230

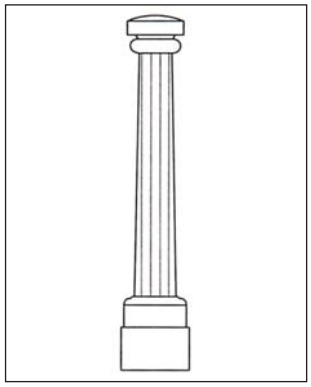

▼ Oslo
Height: 800 Max dia: 187

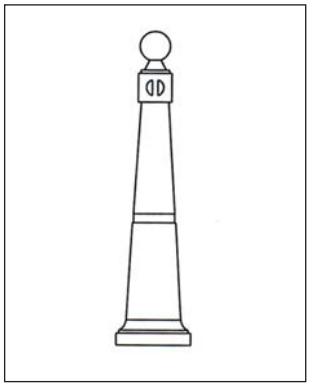

▼ Pontefract
Height: 1110 Max dia: 210

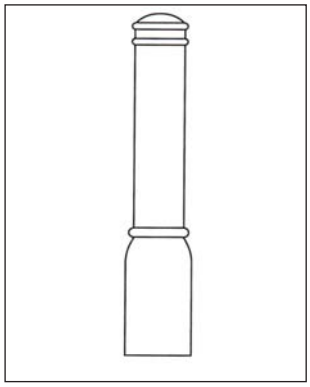

All measurements in mm

▼ Redbridge
Height: 920 Max dia: 200

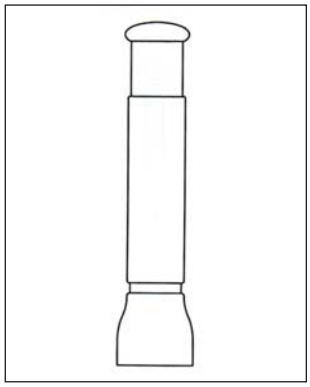

▼ St Anne's
Height: 1005 Across flats on base: 202

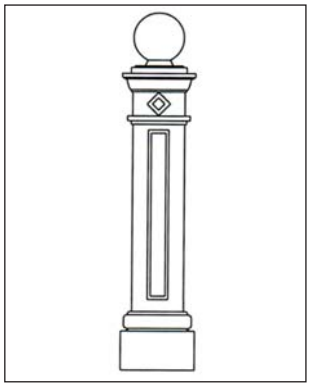

▼ Seaham
Height: 850 Across flats on base: 150

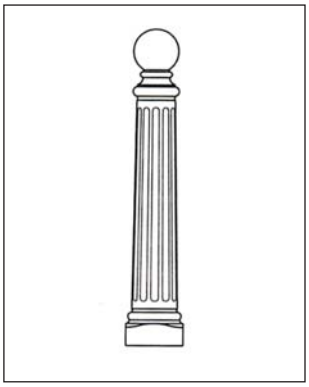

▼ Small Cannon
Height: 965 Max dia: 110

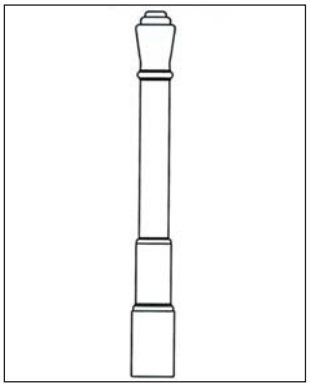

▼ Victoriana
Height: 900 Max dia: 120

▼ Woking
Height: 925 Across flats at head: 165

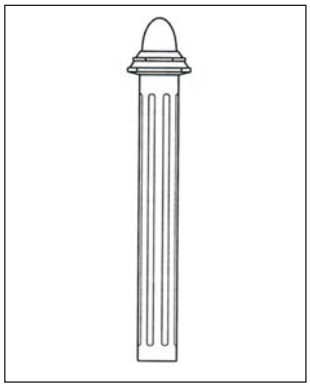

▼ Whitley
Height: 980 Max dia: 200

▼ William IV
Height: 1010 Square at base: 140

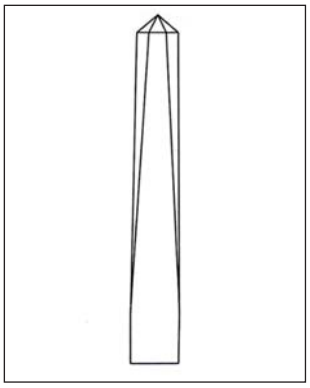

▼ Art deco
Height: 900 Max dia: 180x130

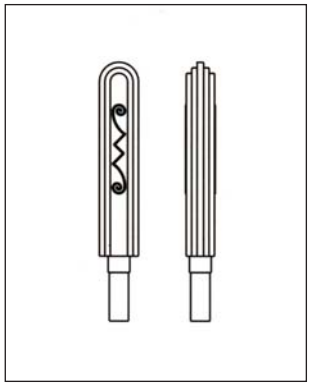

▼ Beaumont
Height: 940 Max dia: 194

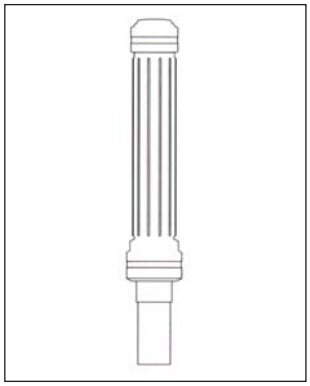

▼ Bedford
Height: 900 Max dia: 200

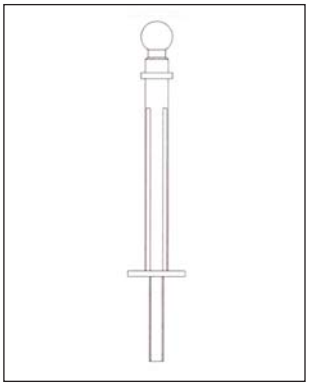

▼ Benllech
Height: 1197 Max dia: 194

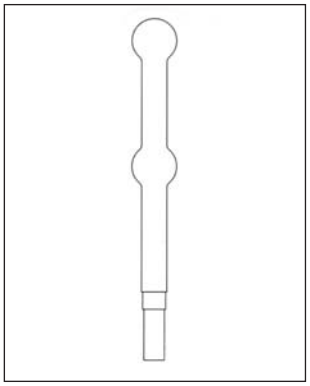

▼ Benwell
Height: 790 Max dia: 120

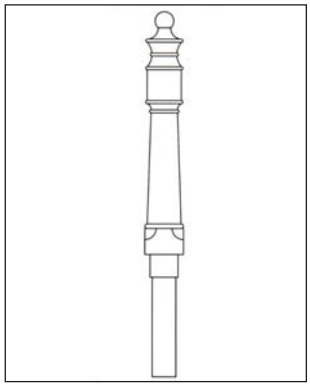

▼ Beresford
Height: 920 Max dia: 197

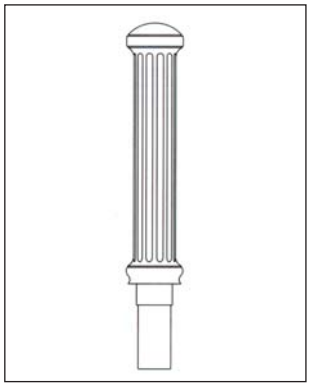

▼ Bideford
Height: 1295 Max dia: 275

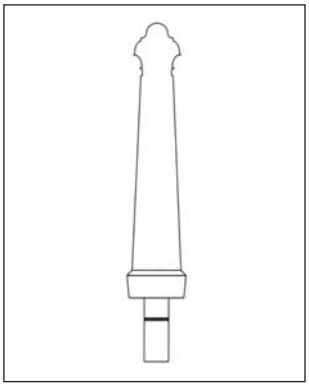

▼ Bradford
Height: 1130 Max dia: 135

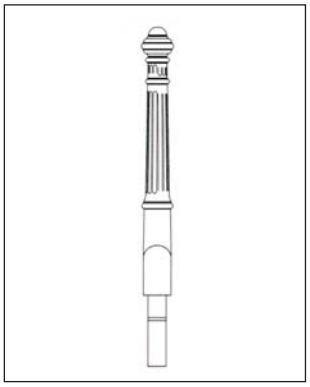

All measurements in mm

▼ Bray
Height: 1000 Max dia: 250

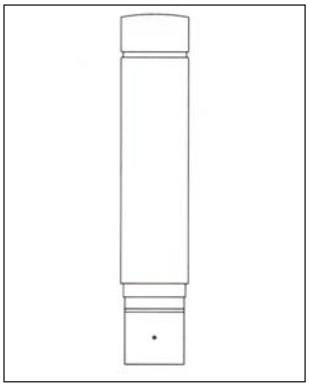

▼ Bridge
Height: 1000 Max dia: 190

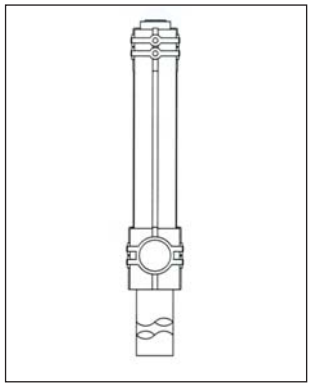

▼ Caernarfon
Height: 987 Max dia: 160

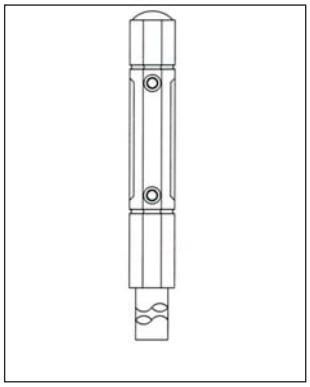

▼ Cambridge
Height: 1210 Square base: 117

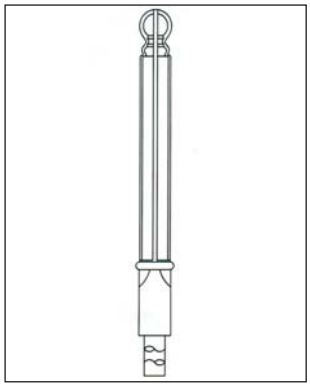

▼ Reduced Millenium
Height: 500 Max dia: 250

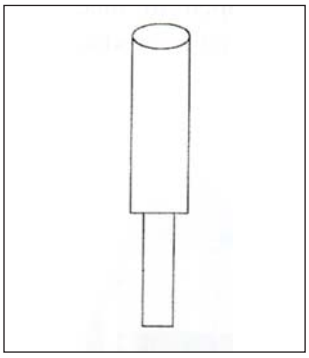

▼ Renfrew
Height: 750 Max dia: 100

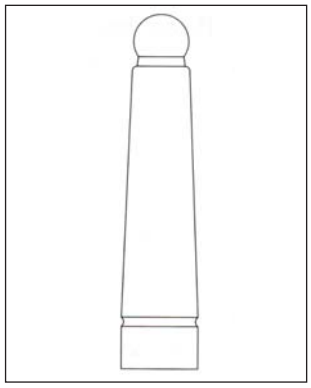

▼ Riverside
Height: 1000 Max dia: 155

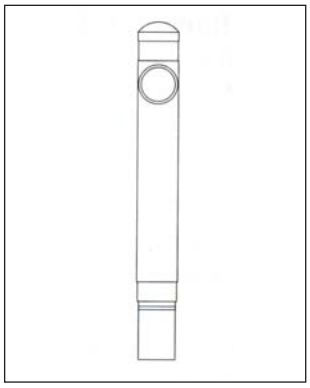

▼ St Mary's
Height: 1000 Max dia: 90

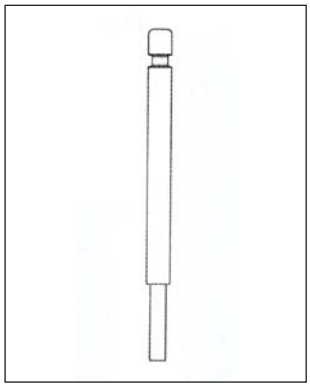

▼ Sandwell
Height: 1000 Max dia: 90

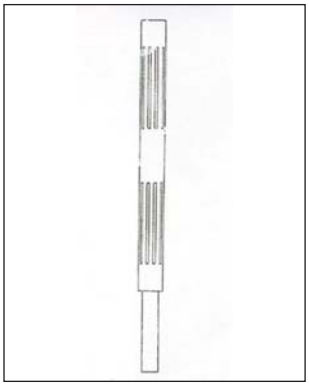

▼ Slough
Height: 900 Max dia: 182

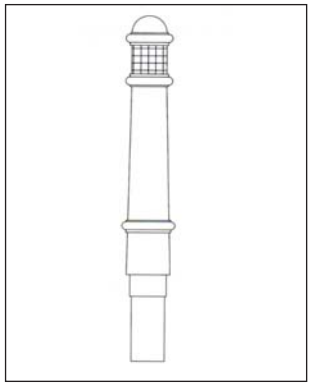

▼ Stockport
Height: 1215 Max dia: 190

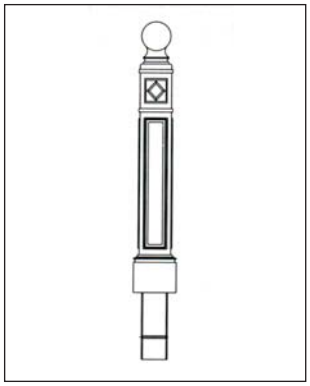

▼ Sunderland
Height: 896 Max dia: 157

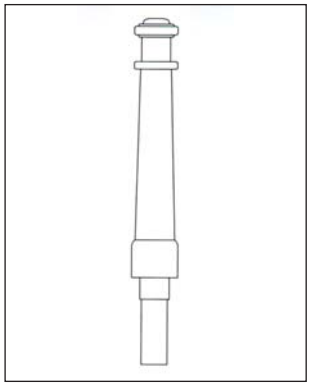

▼ Sutton redroute
Height: 965 Max dia: 153

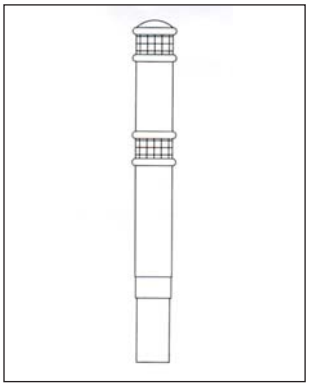

▼ Tyne
Height: 1000 Max dia: 90

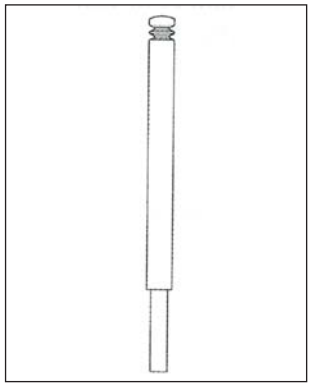

▼ Westminster
Height: 1075 Max dia: 142

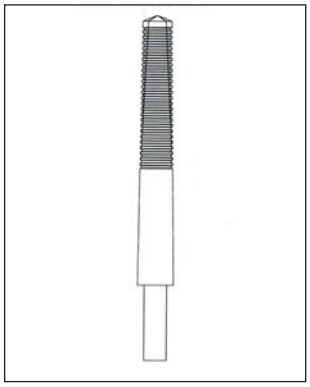

▼ Mooring
Height: 302 Max dia: 228

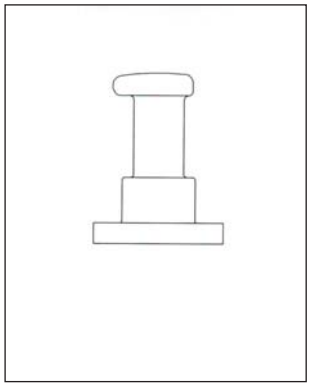

All measurements in mm

Composite Bollards

Bollards are shown at a height above ground of 1000mm. Standard root length is 300mm. Dimensions below are in mm.

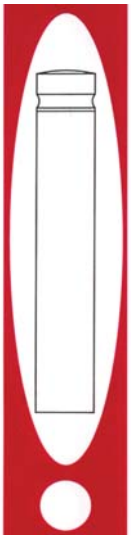

SF-CB01
Steel dia: 168

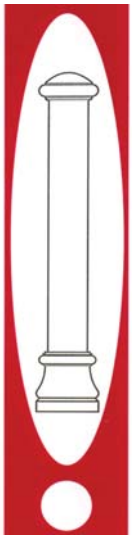

SF-CB02
Steel dia: 114

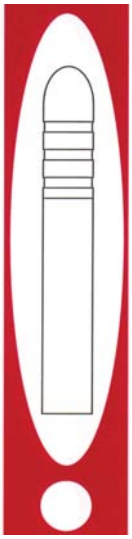

SF-CB03
Steel dia: 140

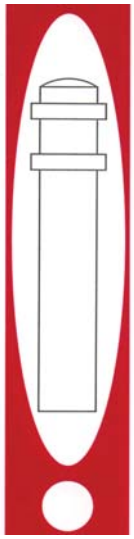

SF-CB04
Steel dia: 168

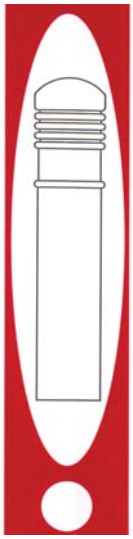

SF-CB05
Steel dia: 194

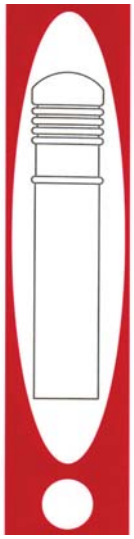

SF-CB06
Steel dia: 168

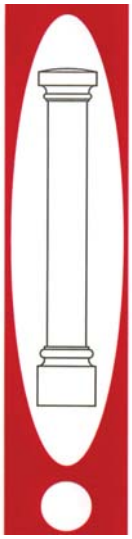

SF-CB07
Steel dia: 114

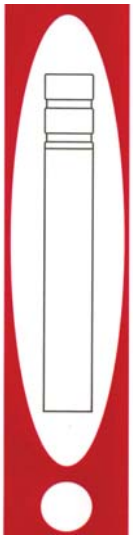

SF-CB08
Steel dia: 140

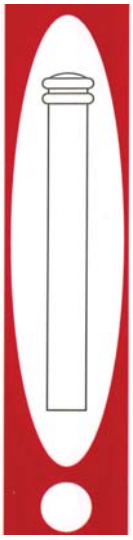

SF-CB09
Steel dia: 114

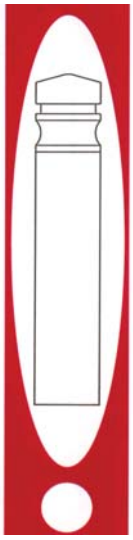

SF-CB10
Steel dia: 194

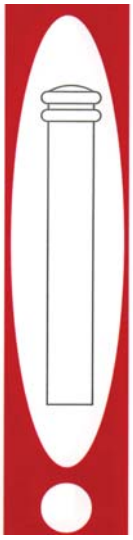

SF-CB11
Steel dia: 140

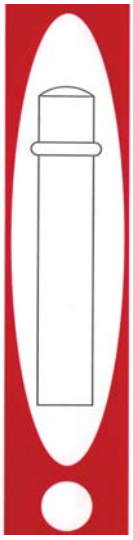

SF-CB12
Steel dia: 168

SF-CB13
Steel size: 150

SF-CB14
Steel size: 150

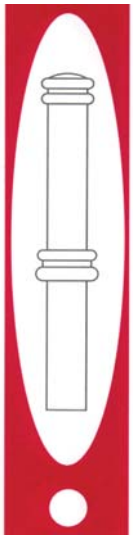

SF-CB15
Steel dia: 114

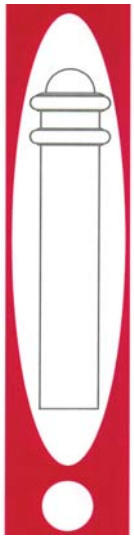

SF-CB16
Steel dia: 168

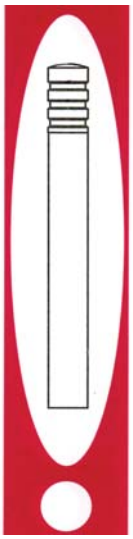

SF-CB17
Steel dia: 168

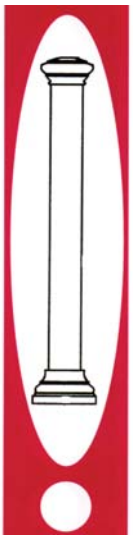

SF-CB18
Steel dia: 168

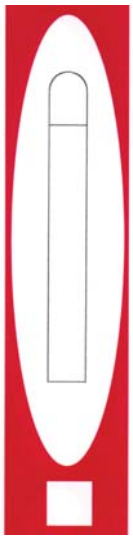

SF-CB19
Steel size: 150

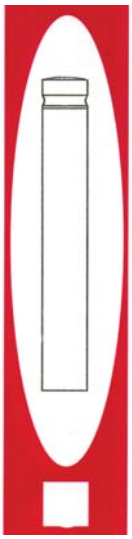

SF-CB20
Steel dia: 114

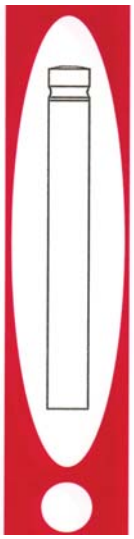

SF-CB21
Steel dia: 140

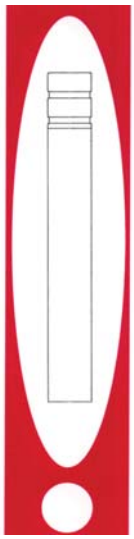

SF-CB22
Steel dia: 168

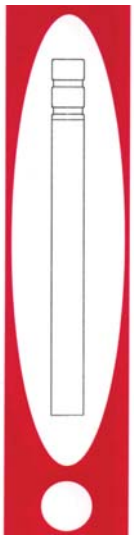

SF-CB23
Steel dia: 168

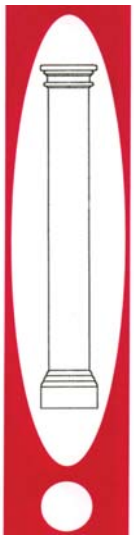

SF-CB24
Steel dia: 168

Bollard Product Selector

This is a summary, please refer to the product brochure for full details on all options available.

		HERITAGE			SENTINEL			MANCHESTER	SENTRY		WOBURN		REGENCY		EDGEMINDER	MONARCH	STERLING	VERGEMARKER II	LINSIGN 300				LINSIGN 230				LINSIGN 150									
Version		150	150	Deco	150	150	Deco		150	Visibol	150	75	150	Deco					Heritage	Heritage	Sentinel	Sentinel	Heritage	Heritage	Sentinel	Sentinel	Heritage	Sentinel	Heritage	Sentinel	Sentinel	Sentinel	Sentry	Sentry	Version	
Type			Visibol			Visibol														Visibol		Visibol			Visibol						Decorative			Visibol		Type
Dimensions (mm)	Height	1024	1024	921	1030	1030	926	1010	1125	1125	1084	1009	1030	910	510	800	800	938	1419	1419	1419	1419	1352	1352	1352	1352	1098	1098	1098	1098	1300	1196	1376	1376	Height	Dimensions (mm)
	Diameter	171	171	171	166	166	166	201	166	166	185	185	166	166	130	170	170	125	364	364	364	364	339	339	339	339	195	195	195	195	195	195	195	195	Diameter	
Material Options	Standard	✓	✓	✓	✓	✓	✓	✓	✓	✓	✓	✓	✓	✓	✓	✓	✓	–	✓	✓	✓	✓	✓	✓	✓	✓	✓	✓	✓	✓	✓	✓	✓	✓	Standard	Material Options
	Reflex	✓	–	✓	✓	–	✓	✓	✓	–	✓	✓	✓	✓	✓	✓	✓	✓	–	–	–	–	–	–	–	–	✓	✓	–	–	✓	✓	✓	–	Reflex	
	*ECO	✓	✓	✓	✓	✓	✓	✓	✓	✓	–	–	–	–	✓	–	–	–	✓	✓	✓	✓	✓	✓	✓	✓	✓	✓	✓	✓	✓	✓	✓	✓	ECO*	
Fixing Options	PM Permanent	✓	✓	✓	✓	✓	✓	✓	✓	✓	✓	✓	✓	✓	✓	✓	✓	✓	✓	✓	✓	✓	✓	✓	✓	✓	✓	✓	✓	✓	✓	✓	✓	✓	PM Permanent	Fixing Options
	S Socketed	✓	✓	✓	✓	✓	✓	✓	✓	✓	✓	✓	✓	✓	–	–	–	–	✓	✓	✓	✓	✓	✓	✓	✓	✓	✓	✓	✓	✓	✓	✓	✓	S Socketed	
	AR Anti-ram	✓	✓	✓	✓	✓	✓	✓	✓	✓	✓	✓	✓	–	–	✓	✓	–	✓	✓	✓	✓	✓	✓	✓	✓	✓	✓	✓	✓	✓	✓	✓	✓	AR Anti-ram	
	SM Surface	✓	✓	✓	✓	✓	✓	✓	✓	✓	✓	✓	✓	✓	–	–	–	–	✓	✓	✓	✓	✓	✓	✓	✓	✓	✓	✓	✓	✓	✓	✓	✓	SM Surface	
Signage Options	Class ref 1	✓	✓	–	✓	✓	–	✓	✓	✓	✓	✓	✓	–	✓	✓	–	–	✓	✓	✓	✓	✓	✓	✓	✓	✓	✓	✓	✓	✓	✓	✓	✓	Class ref 1	Signage Options
	Class ref 2	✓	✓	–	✓	✓	–	✓	✓	✓	✓	✓	✓	–	✓	–	–	✓	✓	✓	✓	✓	✓	✓	✓	✓	✓	✓	✓	✓	✓	✓	✓	✓	Class ref 2	
	Decorative band	✓	✓	✓	–	–	✓	✓	✓	✓	–	–	–	✓	✓	–	–	–	✓	✓	–	–	✓	✓	–	–	✓	–	✓	–	–	✓	–	–	Decorative band	
DDA Compliant		✓	✓	–	✓	✓	–	–	✓	✓	✓	–	✓	–	–	–	–	–	✓	✓	✓	✓	✓	✓	✓	✓	–	–	✓	✓	–	–	–	–		DDA Compliant

Fixing options

Permanent Fixing (PM)

For permanent fixing the bollard base is concreted in below ground. The bollard is supplied as a single unit with a moulded-in anchor section that is set into the concrete ensuring that the bollard cannot be removed.

Socketed Fixing (S)

This two piece system allows the bollard to be quickly removed to allow immediate access or replacement. The bollard comes with a moulded-in 'bayonet' end that fixes (by rotating through 90 degrees) into a lockable base unit that has been set in concrete below ground level. A blanking cap is available for when the bollard is removed. Where reflex material is specified the product is only suitable for very low speed impacts.

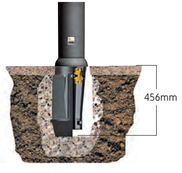

Anti-Ram Fixing (AR)

The bollard is supplied as a 'sleeve' that sits over a robust steel tube core that is permanently concreted into the ground. Effective as a deterrent only to 'ram raiding' (not PAS 68 classified) and also enhances pedestrian safety within high risk areas.

Surface Fixing (SM)

The bollard is supplied with an integral circular base with four bolt holes for quick and easy fixing onto a suitable concrete base. Ideal in a wide range of situations and particularly suitable for multi-storey car parks, bridges and any situation where below ground services or membranes might be vulnerable. Where reflex material is specified the product is only suitable forvery low speed impacts. * ECO version not available

Material options

Reflex (Self Righting)

Reflex bollards are manufactured from a tough and durable material, which enables the products to withstand impact from any direction and return to an upright position and continue in service.

Specify Reflex material for vulnerable locations where conventional bollards would otherwise require frequent replacement.

Where reflex material is specified with either a Socketed or Surface Fixing the product is only suitable for very low speed impacts.

ECO

ECO bollards are manufactured using a combination of 50% chipped plastic bottles and 50% regular polymer. Using chipped material reduces the environmental impact of re-processing to the absolute minimum.

ECO bollards are available in black or an attractive stone effect finish which, due to the nature of the material, will vary slightly.

Standard

Standard Moulded Polyethylene (PE) is extremely durable with outstanding impact, fracture and shatter resistance properties tested to BS2782. PE is also 100% recyclable allowing the material to be reused at the end of the bollard in-service life.

Reflective Banding

Class ref 1 Engineering Grade

Applications: Non Highway traffic signs, emblems, street name plates and other general signage.

Benefits: Provides good level of reflective performance, appearing both bright and legible in daylight and at night.

7 year effective performance life.

Class ref 2 High Intensity

Applications: Highway traffic safety applications where night time visibility is paramount.

Benefits: Provides high level of reflective performance. Class 2 material is approximately 3.5 times brighter than Class 1 material and provides a 10 year effective performance life.

Aluminium backed British Standard Reflective Banding (BS EN 12899-1 2001)

Decorative/Non-reflective
gold/silver banding
personalised sign faces and bands available

Decorative Banding

Gold and Silver metallic decorative banding is available as a standard optional extra to add a stylish and traditional look particularly in heritage or prestige environments. If there is a special requirement to use coloured or reflective material on the decorative band this may also be possible by quotation subject to quantities and lead times.

Heritage 75

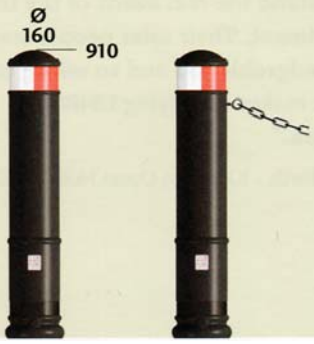

Key features Durable plastic bollard, non-corrosive, maintenance-free and recyclable. Moulded-in colour. Choice of tops.
Popular uses Demarkation of parking spaces and pedestrian precincts, separation of pedestrian, cycle and vehicular routes, hazard marking and anti-ram.
Optional features Blanking cap, chain link, stone finish. Class 1, Class 2, decorative bandings and Visibol version.
Fixing mechanism Socketed, surface, anti-ram and permanent.
Materials UV stabilised moulded polyethylene (PE). Reflective bandings applied to aluminium carriers.
Colour range Choose from Heritage and Stone range as standard. Other colours made to order.

Heritage 150

Key features Durable plastic bollard, non-corrosive, maintenance-free and recyclable. Moulded-in colour. Choice of tops.
Popular uses Demarkation of parking spaces and pedestrian precincts, separation of pedestrian, cycle and vehicular routes, hazard marking and anti-ram.
Optional features Blanking cap, chain link, stone finish. Class 1, Class 2, decorative bandings and Visibol version.
Fixing mechanism Socketed, surface, anti-ram and permanent.
Materials UV stabilised moulded polyethylene (PE). Reflective bandings applied to aluminium carriers.
Colour range Choose from Heritage and Stone range as standard. Other colours made to order.

Heritage Reflex 150

Key features Hard-wearing self-righting plastic bollard. Non-corrosive, maintenance-free and recyclable. Moulded-in colour. Shatter-proof angled reflectors.
Popular uses Hazard marking in high risk locations.
Optional features Class 1 and Class 2 reflective banding. Visibol version available.
Fixing mechanism Surface and permanent.
Materials UV stabilised moulded polyethylene (PE). Reflective bandings applied to aluminium carriers.
Colour range Black, white and dark grey stone.

Heritage Visibol 150

Key features Highly reflective Heritage-styled plastic bollard, non-corrosive, maintenance-free and recyclable. Moulded-in colour. Choice of tops. Recessed areas protect reflective banding.
Popular uses Poorly lit locations and accident black spots where reflective bollard could help reduce risk. As distinctive lead bollard in traffic calming schemes.
Optional features Blanking cap, chain link, stone finish. Wide selection of banding combinations.
Fixing mechanism Socketed, surface, anti-ram and permanent.
Materials UV stabilised moulded polyethylene (PE). Reflective bandings applied to aluminium carriers.
Colour range Choose from Heritage and Stone range as standard. Other colours made to order.

All measurements in mm

Classic Visibol 150

Key features Highly reflective Classic-styled plastic bollard, non-corrosive, maintenance-free and recyclable. Moulded-in colour. Choice of tops. Recessed areas protect reflective banding.
Popular uses As distinctive lead bollard in traffic calming schemes. Also poorly lit locations and accident black spots where reflective bollard could help reduce risk.
Optional features Blanking cap, chain link, stone finish. Wide selection of banding combinations.
Fixing mechanism Socketed, surface, anti-ram and permanent.
Materials UV stabilised moulded polyethylene (PE). Reflective bandings applied to aluminium carriers.
Colour range Choose from Heritage and Stone range as standard. Other colours made to order.

Edgeminder 20mm band

Key features Durable Heritage plastic mini bollard with 20mm reflective banding. Non-corrosive, maintenance-free and recyclable. Moulded-in colour.
Popular uses Perimeter control for grassed and landscaped areas. Definition of pedestrian routes to and from parking areas. Kerbside protection on public roads. Identification of reserved parking.
Optional features Security bar for soft verge location. Chain link, stone finish. Class 1 and decorative bandings.
Fixing mechanism Anti-ram and permanent.
Materials UV stabilised moulded polyethylene (PE). Reflective bandings applied to aluminium carriers.
Colour range Choose from Heritage and Stone range as standard. Other colours made to order.

Edgeminder 150mm band

Key features Durable Heritage plastic mini bollard with 150mm reflective banding. Non-corrosive, maintenance-free and recyclable. Moulded-in colour.
Popular uses Perimeter control for grassed and landscaped areas. Definition of pedestrian routes to and from parking areas. Kerbside protection on public roads. Identification of reserved parking.
Optional features Security bar for soft verge location. Chain link, stone finish. Class 1 and decorative bandings.
Fixing mechanism Anti-ram and permanent.
Materials UV stabilised moulded polyethylene (PE). Reflective bandings applied to aluminium carriers.
Colour range Choose from Heritage and Stone range as standard. Other colours made to order.

Classic 75

Key features Durable plastic bollard, non-corrosive, maintenance-free and recyclable. Moulded-in colour. Choice of tops.
Popular uses Separation of pedestrian, cycle and vehicular routes, demarkation of parking spaces and pedestrian precincts, hazard marking and anti-ram.
Optional features Blanking cap, chain link, stone finish. Class 1, Class 2, decorative bandings and Visibol version.
Fixing mechanism Socketed, surface, anti-ram and permanent.
Materials UV stabilised 100% post consumer recycled moulded polyethylene (PE). Reflective bandings applied to aluminium carriers.
Colour range Choose from Classic and Stone range as standard. Other colours made to order.

All measurements in mm

Classic 150

Key features Durable plastic bollard, non-corrosive, maintenance-free and recyclable. Moulded-in colour. Choice of tops.
Popular uses Demarkation of parking spaces and pedestrian precincts, separation of pedestrian, cycle and vehicular routes, hazard marking and anti-ram.
Optional features Blanking cap, chain link, stone finish. Class 1, Class 2, decorative bandings and Visibol version.
Fixing mechanism Socketed, surface, anti-ram and permanent.
Materials UV stabilised 100% post consumer recycled moulded polyethylene (PE). Reflective bandings applied to aluminium carriers.
Colour range Choose from Classic and Stone range as standard. Other colours made to order.

Monarch

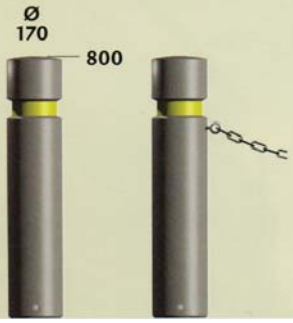

Key features Hard-wearing easy to install plastic bollard. Non-corrosive, maintenance-free and recyclable. Moulded-in colour. Choice of decorative bandings.
Popular uses Demarkation of parking spaces and pedestrian precincts in retail and high street settings. Ram raid deterrent.
Optional features Chain link. Decorative bandings. Heavy duty core for ram raid protection.
Fixing mechanism Anti-ram and permanent.
Materials UV stabilised moulded polyethylene (PE). Reflective bandings applied to aluminium carriers. Galvanised steel structural core.
Colour range Choose from Heritage and Stone range as standard. Other colours made to order.

Sterling

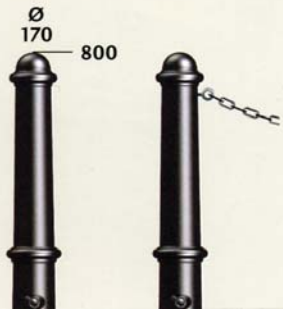

Key features Robust moulded plastic bollard with appearance of metal. Non-corrosive, maintenance-free and recyclable. Moulded-in colour.
Popular uses Demarkation of parking spaces and pedestrian precincts in retail and high street settings. Ram raid deterrent.
Optional features Chain link. Heavy duty core for ram raid protection.
Fixing mechanism Anti-ram and permanent.
Materials UV stabilised moulded polyethylene (PE). Galvanised steel structural core.
Colour range Choose from Heritage and Stone range as standard. Other colours made to order.

Linsign 135

Key features Durable plastic Heritage signage bollard. Non-corrosive, maintenance-free and recyclable. Moulded-in colour. Choice of TSRGD approved signage tops.
Popular uses Demarkation of parking spaces and pedestrian precincts, hazard marking, display of advisory symbols.
Optional features Blanking cap, stone finish. Class 2 sign face. Visibol version available.
Fixing mechanism Socketed, surface and permanent options.
Materials UV stabilised moulded polyethylene (PE). Reflective bandings applied to aluminium carriers.
Colour range Choose from Heritage and Stone range as standard. Other colours made to order.

All measurements in mm

Linsign 205

Key features Durable plastic Heritage signage bollard. Non-corrosive, maintenance-free and recyclable. Moulded-in colour. Choice of TSRGD approved signage tops.
Popular uses Bus stops and bus lanes, separation of pedestrian, cycle and vehicular routes, demarkation of pedestrian precincts, hazard marking, advisory symbol display.
Optional features Blanking cap, stone finish. Class 2 sign face. Visibol version available.
Materials UV stabilised moulded polyethylene (PE). Reflective bandings applied to aluminium carriers.
Colour range Choose from Heritage and Stone range as standard. Other colours made to order.

Linsign 300

Key features Durable plastic signage bollard. Non-corrosive, maintenance-free and recyclable. Moulded-in colour.
Choice of TSRGD approved signage tops.
Popular uses Speed warnings, separation of pedestrian, cycle and vehicular routes, demarkation of parking spaces, display of advisory symbols.
Optional features Blanking cap, stone finish. Class 1 sign face. Visibol version available.
Fixing mechanism Socketed, surface and permanent options.
Materials UV stabilised moulded polyethylene (PE). Reflective bandings applied to aluminium carriers.
Colour range Choose from Heritage and Stone range as standard. Other colours made to order.

Linsign Visibol 135/205

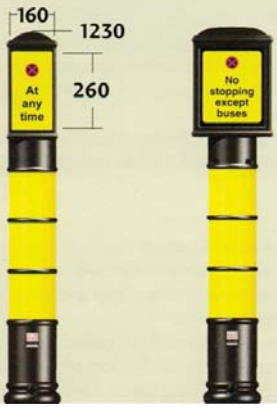

Key features Highly reflective Heritage signage bollard. Non-corrosive, maintenance-free and recyclable. Moulded-in colour. Choice of TSRGD approved signage tops. Recessed areas protect reflective banding.
Popular uses Provides additional visibility to advisory signs.
Optional features Blanking cap, chain link, stone finish. Wide selection of banding combinations.
Fixing mechanism Socketed, surface, anti-ram and permanent.
Materials UV stabilised moulded polyethylene (PE). Reflective bandings applied to aluminium carriers.
Colour range Choose from Heritage and Stone range as standard. Other colours made to order.

Linsign Visibol 300

Key features Highly reflective Classic signage bollard. Non-corrosive, maintenance-free and recyclable. Moulded-in colour. Choice of TSRGD approved signage tops. Recessed areas protect edges of reflective banding.
Popular uses Poorly lit locations and accident blackspots where fully reflective bollards could help to reduce risks.
Optional features Blanking cap, stone finish. Wide selection of banding combinations.
Fixing mechanism Socketed, surface, anti-ram and permanent.
Materials UV stabilised moulded polyethylene (PE). Reflective bandings applied to aluminium carriers.
Colour range Choose from Heritage and Stone range as standard. Other colours made to order.

All measurements in mm

Allegrini Verge Post Bollards

Allegrini verge post

The traditional verge post made from hollow plastic with a 'solid' look. All the posts are suitable for installation in concrete, asphalt or soil. Visually compatible, they blend with existing posts in any situation. The long life of all the posts makes them economical with the added bonus of a proven record for all-round safety.

- Designed and manufactured to the highest specification
- Quick and simple to install
- Clearly visible by day or night and in bad weather conditions
- Highly durable plastic has special additive giving resistance to UV radiation
- These cylindrical posts are self-cleaning in wet weather - which ensures reduced maintenance
- Can be used anywhere - from trunk roads to car parks
- Cost-effective, lightweight, rust and rot proof
- In the event of impact, Allegrini has no sharp edges and will not splinter or become a dangerous missile
- Class 1 reflectors in red and white
- Packed in bags of 10

Specification:

Height	130cm
Weight	1.8Kg
Colour	Black and white
Reflectors	Red and white

Reflex Vergemarker

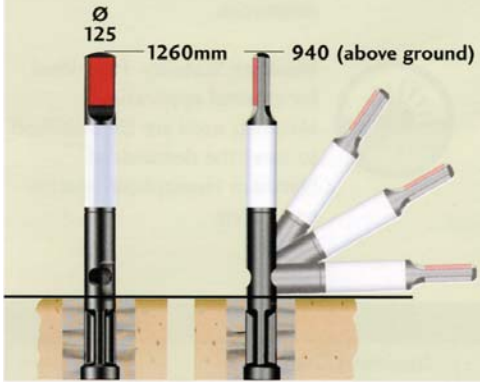

Key features Affordable self-righting reflective plastic marker post. Non-corrosive, maintenance-free and recyclable. Shatter-proof angled reflectors. Highly visible white band on smooth 'non-clog' surface.
Popular uses Hazard marking in high risk locations.
Optional features Also available in rigid staked.
Fixing mechanism Surface and permanent.
Materials UV stabilised moulded polyethylene (PE). Reflective bandings applied to aluminium carriers.
Colour range Black.

Staked Vergemarker

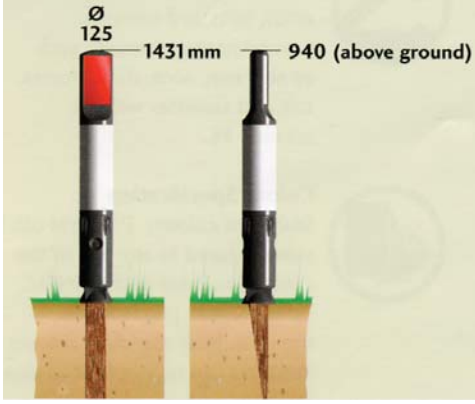

Key features Affordable low-cost moulded plastic reflective marker post with pressure impregnated timber fixing stake. Non-corrosive, maintenance-free and recyclable. Angled shatter-proof reflectors.
Popular uses Verge control for grassed and landscaped areas. Hazard warning for unkerbed rural and urban roads. Demarkation of routes.
Optional features Class 1 or 2 reflective material to BS873.
Fixing mechanism Surface, positioned on stake installed directly into ground. With self-locking mechanism to prevent unauthorised removal.
Materials Self-coloured UV stabilised 100% post consumer recycled moulded polyethylene (PE). Reflective bandings applied to aluminium carriers.
Colour range Black.

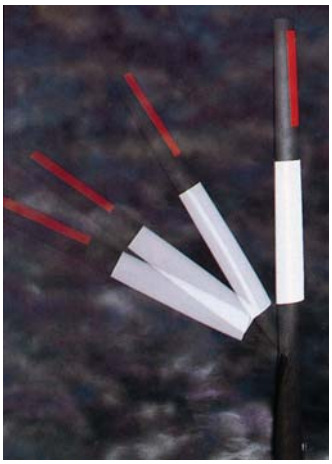

◀ Springbac

Manufactured from polypropylene modified with an Elastomer to provide excellent impact resistance even at very low temperatures. Installation could not be simpler - the only tool required for fixing is a hammer. Vehicle impact causes the post to flex fully before returning to the upright position.

Marker post

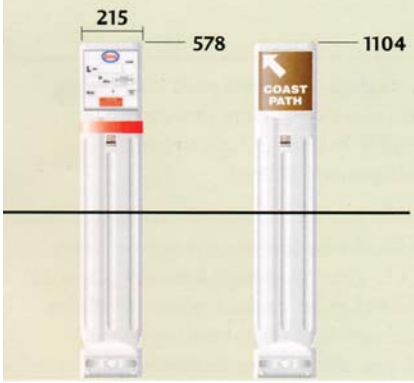

Key features High-strength plastic marker with ribbed construction. Interlocking features allow posts to be stacked for storage or transportation. Push-in firtree fixing of information plaque.
Popular uses Boundary marking and identification of below-ground pipelines, cabling and buried hazards. Footpath route marker.
Optional features Ground anchor bar to prevent unauthorised removal. Reflective band to improve visibility in poor weather.
Fixing mechanism Installed directly into ground to height indicated by moulded-in ground level marker.
Materials Self-coloured UV stabilised 100% post consumer recycled moulded polyethylene (PE). Reflective bandings applied to aluminium carriers.
Colour range Light grey.

All measurements in mm

Concrete Bollards

▼ Range of concrete bollards

Street Furnishings offer a comprehensive range of concrete bollards made to order. Our standard concrete bollards are the smooth grey finish 3'6" and 4'6" carried in stock.

◀ **Nene** (left)

4'6" smooth grey finish.

◀ **Windrush** (right)

3'6" smooth grey finish.

Both available ex stock.

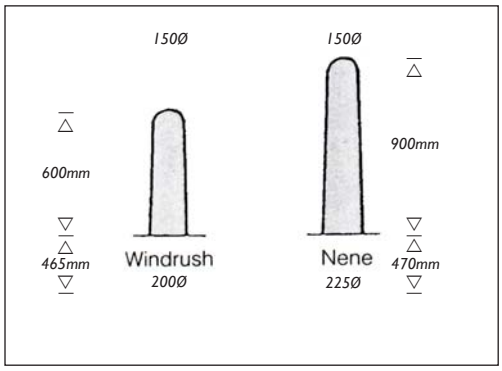

▼ Other colours & finishes

We recommend that choice of colour is judged from material samples available on request.

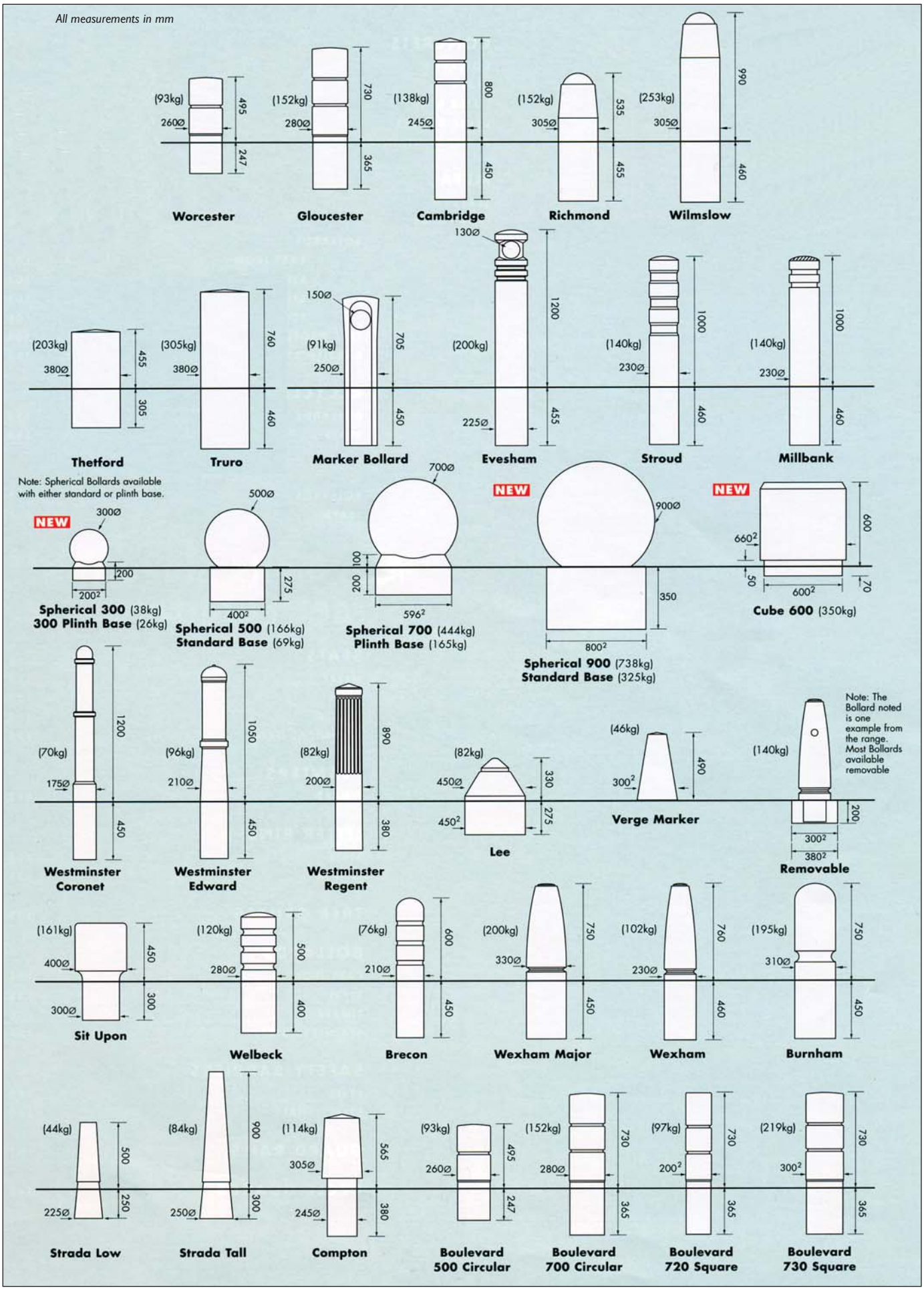
All measurements in mm
(93kg) 260Ø 495 247
Worcester
(152kg) 280Ø 730 365
Gloucester
(138kg) 245Ø 800 450
Cambridge
(152kg) 305Ø 535 455
Richmond
(253kg) 305Ø 990 460
Wilmslow
(203kg) 380Ø 455 305
Thetford
(305kg) 380Ø 760 460
Truro
150Ø
(91kg) 250Ø 705 450
Marker Bollard
130Ø
(200kg) 225Ø 1200 455
Evesham
(140kg) 230Ø 1000 460
Stroud
(140kg) 230Ø 1000 460
Millbank
Note: Spherical Bollards available with either standard or plinth base.
NEW
300Ø 200 200²
Spherical 300 (38kg)
300 Plinth Base (26kg)
500Ø 275 400²
Spherical 500 (166kg)
Standard Base (69kg)
700Ø 100 200 596²
Spherical 700 (444kg)
Plinth Base (165kg)
NEW
900Ø 350 800²
Spherical 900 (738kg)
Standard Base (325kg)
NEW
660² 600 50 600² 70
Cube 600 (350kg)
(70kg) 175Ø 1200 450
Westminster Coronet
(96kg) 210Ø 1050 450
Westminster Edward
(82kg) 200Ø 890 380
Westminster Regent
(82kg) 450Ø 330 275 450²
Lee
(46kg) 300² 490
Verge Marker
(140kg) 200 300² 380²
Removable
Note: The Bollard noted is one example from the range. Most Bollards available removable
(161kg) 400Ø 450 300 300Ø
Sit Upon
(120kg) 280Ø 500 400
Welbeck
(76kg) 210Ø 600 450
Brecon
(200kg) 330Ø 750 450
Wexham Major
(102kg) 230Ø 760 460
Wexham
(195kg) 310Ø 750 450
Burnham
(44kg) 225Ø 500 250
Strada Low
(84kg) 250Ø 900 300
Strada Tall
(114kg) 305Ø 565 245Ø 380
Compton
(93kg) 260Ø 495 247
Boulevard 500 Circular
(152kg) 280Ø 730 365
Boulevard 700 Circular
(97kg) 200² 730 365
Boulevard 720 Square
(219kg) 300² 730 365
Boulevard 730 Square

Wooden Bollards

▶ Range of wooden bollards

Street Furnishings wooden bollards are available in:

- Hardwood
- Softwood
- Fixed
- Removable
- Options with reflectors

Ideal for cycle paths.

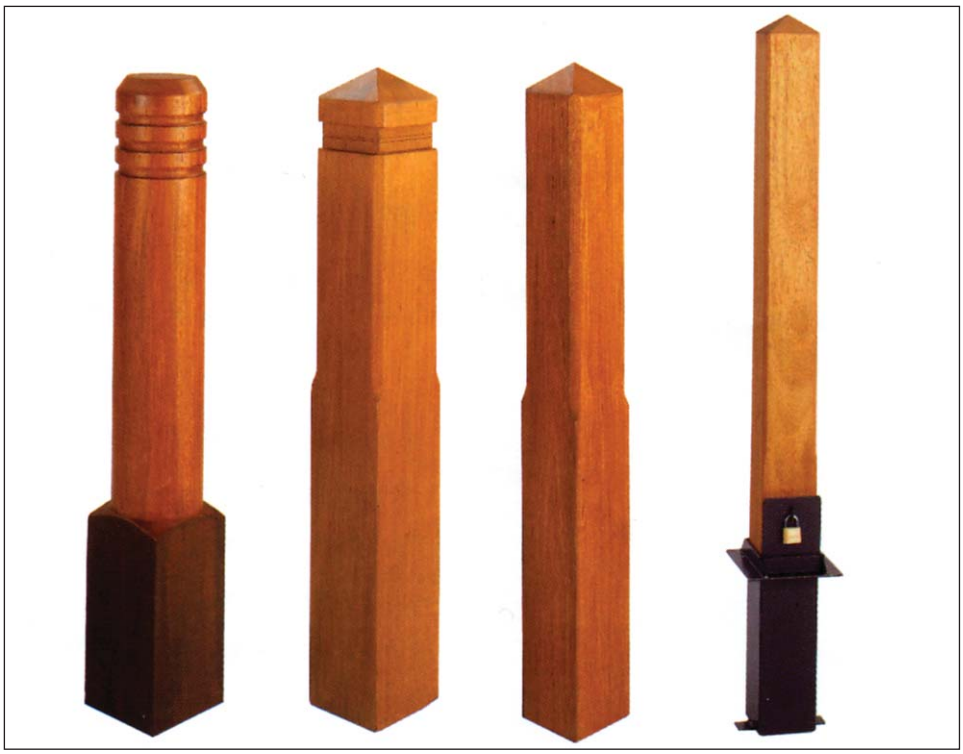

Environment policy

Street Furnishings, as suppliers of wooden street furniture, have a duty of care for our environment. We therefore follow environmentally sound practices at all times. We only supply using renewable and choice timbers sourced from ethically managed or FSC approved forests.

▼ Removable socket closed

▼ Removable socket open

▼ Removable cycle path bollard

▼ Fixed cycle path bollard

▲ Ecco shell (flexible)

- Economy bodyshell 270
- Complete with stainless steel bolt fixing & nylon bushes
- Single aspect

▲ Reflex shell (flexible)

- Reflex bodyshell 270
- Complete with stainless steel pins
- Single aspect

▲ MDP shell (rigid)

- MDP rigid bodyshell 270
- Complete with nylon fixing pins
- Single aspect

▲ Safelite 600 MDP (rigid)

- Safelite 600 MDP rigid shell
- Complete with nylon fixing pins
- Single aspect

▲ Safelite 600 (flexible)

- Safelite 600 reflex shell
- Complete with stainless steel fixing pins
- Single aspect

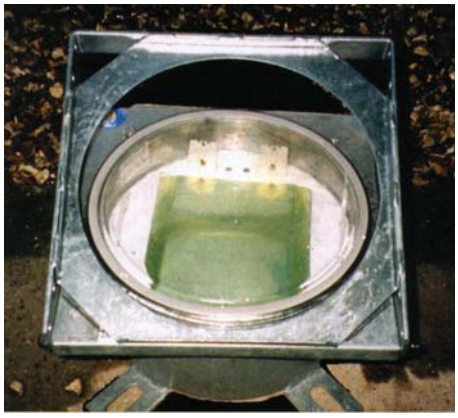

▲ PDG1 bollard base

- Domed polycarbonate lid
- One-piece heavy duty spun cannister
- Designed to meet IP67
- Variations on cable entry glands or turrets
- Easily removable gear tray
- Stainless steel hinged pivot frame
- Available 3 x 11W format
- Quick release version available
- Base completely galvanised to BS729
- Competitively priced

◀ Basebox 19C

- 2 x 11 watt c/w lamps
- Lead tubes as standard
- Gland fitting available

▶ Basebox 19D

For use with Safelite shells.

- 3 x 11 watt c/w lamps
- Lead tubes as standard
- Gland fitting available

Night owl

Type		Illuminated	Non-illumated
Dimensions (mm)	Height	1037	1037
	Width / Depth	395 / 110	395 / 110
	Sign face	300 dia	300 dia
	Base	320 x 320	320 x 320
Material		One piece reflex/rigid polymer composite	Reflex base, rigid polymer bollard
Passively safe	PM Permanent	BS EN 12767:2007 100 NE4.	BS EN 12767:2007 100 NE4.
Conspicuity	Type	Fluorescent translucent retroreflective to BS 5740	Fluorescent retroreflective to BS 5740
	Area front	0.16m^2	0.16m^2
	Area side	0.045m^2	0.045m^2
Lighting	Source	Cree LED powered by Zeta 240V - 6.65 Watts Circuit power factor 6.4	
	Photocell	55 Lux, Switching ratio1:0.5 Typical burn hours 4115	
UMSUG	Charge code	40 0007 0006 100	
Fixing		Attach to in-ground Duct Box Retrofit to other base boxes with adapter plates	Concrete-in Surface mount

Night Owl™

All plastic, recyclable, passively safe, self-righting 'Keep Left' bollards that minimise the consequences of collisions for the driver and reduce the cost of repair and maintenance for the authority.

Available in both illuminated and non-illuminated formats, Night Owl has passed BS EN 12767:2007 & BS 8442:2006, 'Retro Reflective Self Righting Bollards' which require products to remain intact, returning to an upright position after a high speed impact, without reducing the speed of the vehicle by more than 3km/h.

Night Owl has particular application as a Keep Left bollard providing a durable, low maintenance, energy efficient, reduced carbon footprint solution for traffic islands in general.

See the Night Owl brochures for detailed information.

Night Owl is a Trademark of Leafield Environmental Ltd

Flat top bollard

- Classical slim line design
- Robust aluminium construction
- High performance polycarbonate refractive lens
- Fused cut-out with SWA cable terminations
- Large access door for easy installation
- Wide range of clour finishes available
- Finished in grey as standard

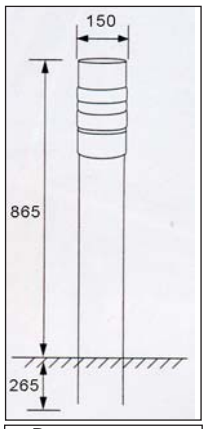

Dimensions in mm

Lamp options:
- 50W SON-E/I (internal ignitor) - E27 cap
- 50W MBFU Deluxe - E27 cap
- 9W TC-S compact fluorescent, 4000oK - G23 cap
- 100W (max) GLS - E27 cap

Materials:
- Head - pressure die cast aluminium, multi-stage chromate pre-treatment, powder coated in grey finish
- Body - extruded aluminium, multi-stage chromate pre-treatment, powder coated in grey finish
- Lens - clear polycarbonate prismatic refractor

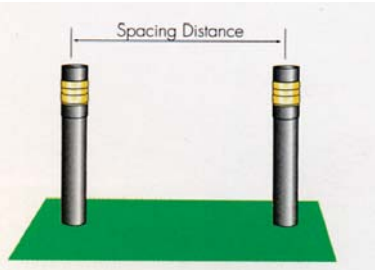

Photometric data:

Cat No.	Spacing distance to achieve typical mid-point illuminance				
	15 lux	10 lux	5 lux	2 lux	1 lux
CBSE50	3.0m	5.5m	7.0m	9.0m	12.0m
CBME50	3.0m	5.0m	6.0m	8.0m	10.0m
CBCT209	3.0m	4.0m	5.0m	7.0m	8.0m
CBGE100	3.0m	4.0m	5.0m	7.0m	8.0m

Dome top bollard

- For use in pathways, walkways, urban spaces, piazzas
- Robust, complies with BS EN 60598 - good value and available in two sizes
- IP65 - very good protection against weather for a long reliable life
- Extruded aluminium housing - tough and durable with a very weather resistant black powder coated finish
- Vandal resistant diffuser - the clear ribbed UV-resistant polycarbonate diffuser will withstand rough treatment
- Versatility in lamp choice - the wide range of lamp types accommodated makes for a very versatile luminaire
- Choice of bases - the zinc coated base plate is standard but a root mounted version is available for greater strength
- Range of options - including a 3-hour integral emergency version, photocell control and a white housing

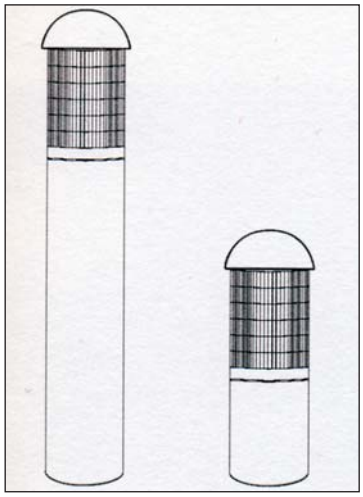

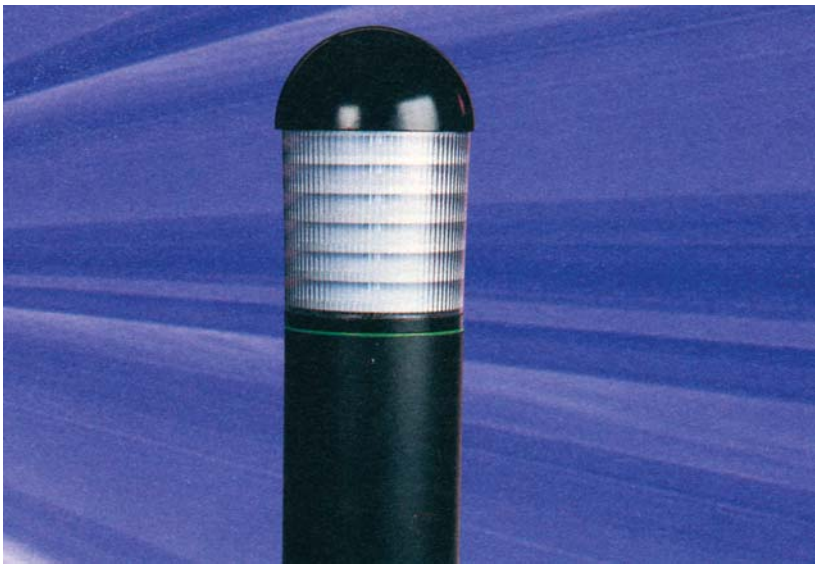

Technical data:
- Two body sizes - available in 500mm and 1100mm heights, extruded aluminium
- Finish - black powder coated as standard
- Lamp types - 70W SON, 80W and 125W MBF/U and 2 x 18W TCD/CFL

Dimensions:

Type	Height mm	Diameter mm	Weight Kg
500	500	180	5.8
1100	1100	180	8.5

With a highly knowledgeable sales team available to assist with any project at any stage from design through implementation and to completion, and access to a wide range of production facilities, we are committed to providing the complete supply service to our customers.

Based in Berkshire at the heart of the motorway network of the M4, M40 and M25, Street Furnishings Ltd is ideally placed for rapid dispatch of goods from its well stocked warehouse to all parts of the United Kingdom and Ireland - from the Channel Islands to the north of Scotland and from East Anglia to the west of Ireland.

Contact the sales office to speak to people who understand the needs of governmental and local authorities as well as contractors. Or visit the web site for more details of our extensive product range.

The Guild of Master Craftsmen
Certificate of Quality & Service

STREET FURNISHINGS LTD

Festival House • Mumbery Hill • Wargrave • Berkshire • RG10 8EE
Tel: 01189 404717 • Fax: 01189 403216 • Email: mail@streetfurnishings.co.uk
www.streetfurnishings.co.uk

Member of the Guild of Master Craftsmen