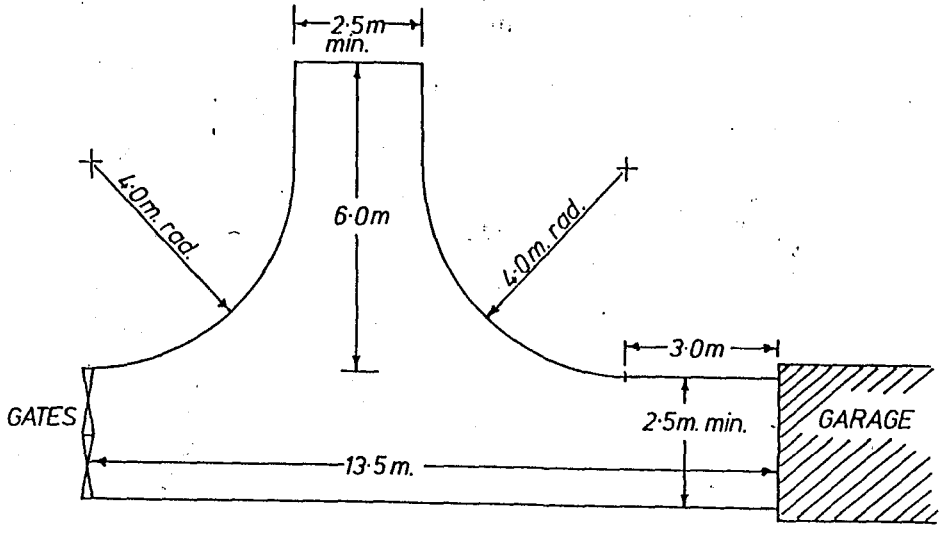

DETAIL OF DOMESTIC TURNING SPACE.

SCALE....1:100

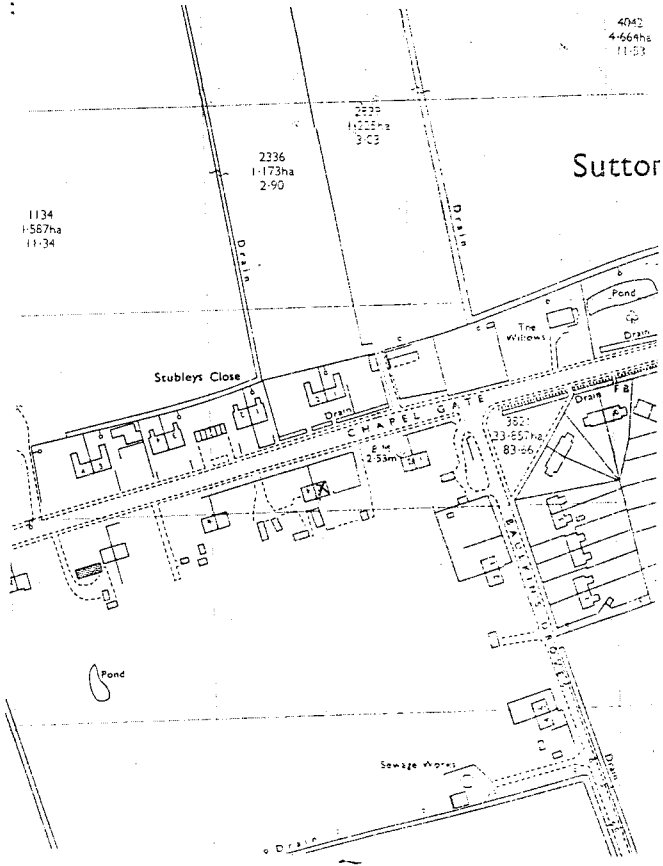

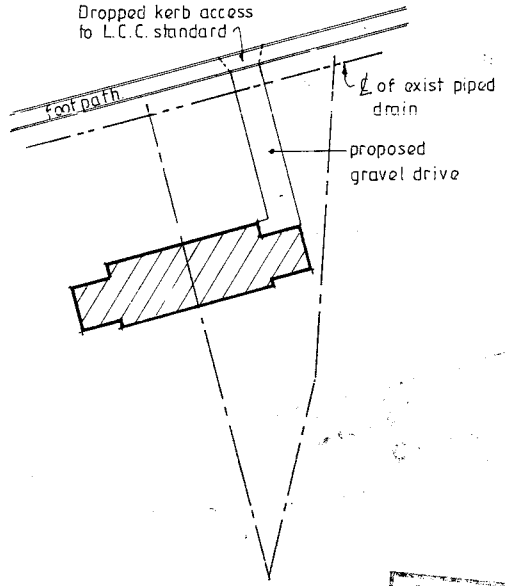

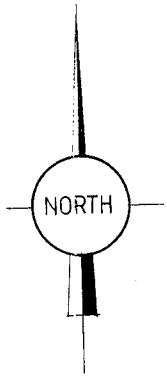

SOUTH
HOUSE
310
Ref: 05

Proposed New Access & Drive. Mr. W. Leuty. 73. Chapel Gate, Sutton-St-James, Spalding, Linc's.