SECTION THROUGH PUMP CHAMBER

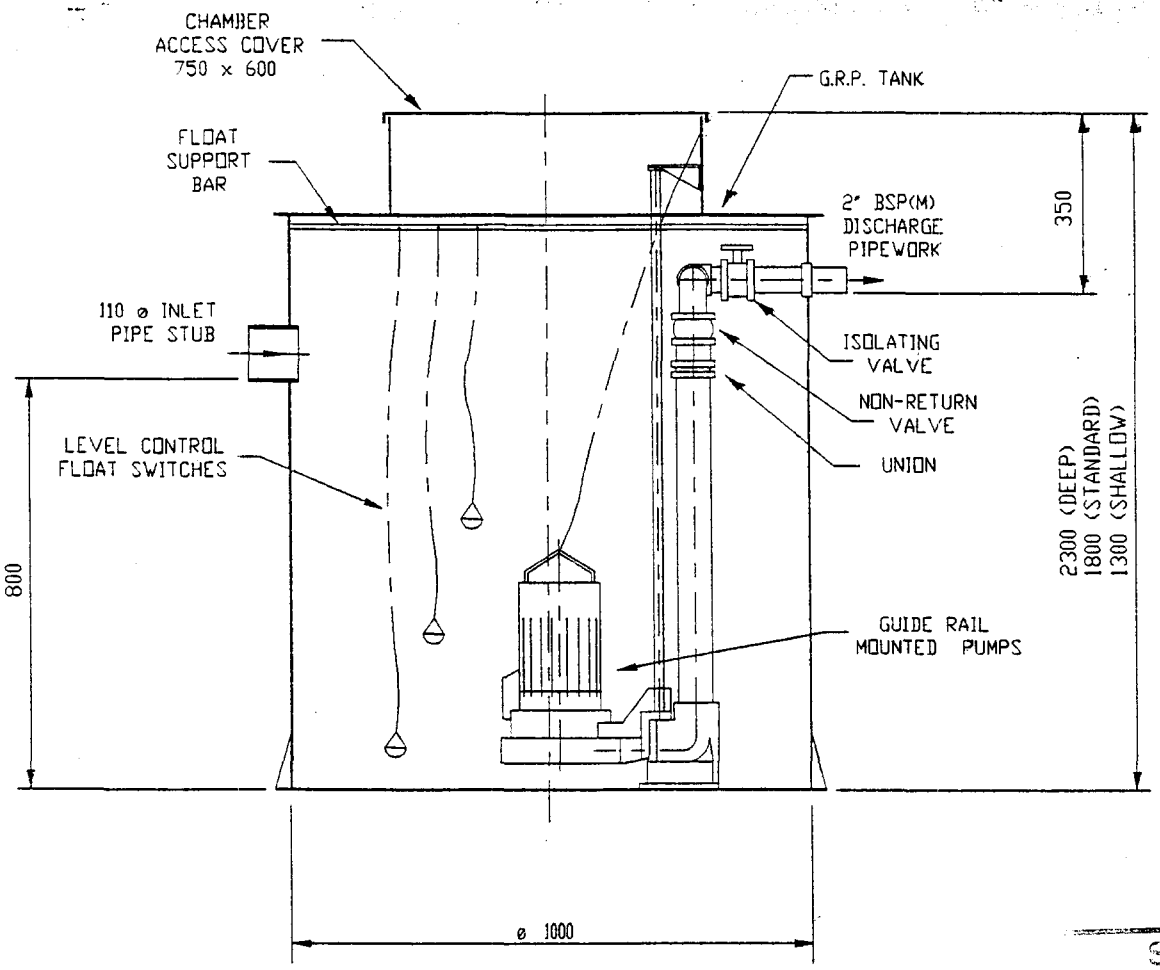

18 JUN 2002

Ref 0708/02

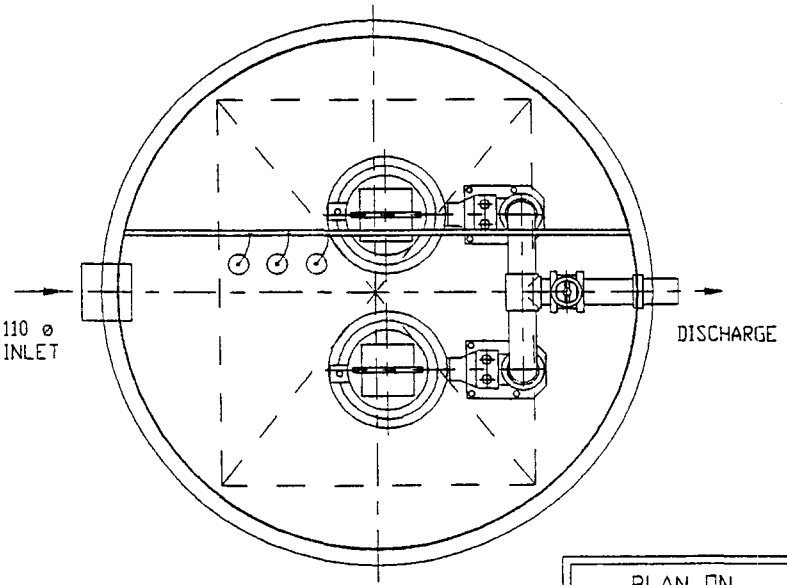

PLAN ON PUMP CHAMBER

Issue	Revision	Date	Appr.

Allerton.
Woodbridge Road, Sleaford,
Lincs. NG34 7EW
Tel: 01529 305757 Fax: 01529 414232



Project Ref. Index.1034
Scale: 1 : 15 (AT A4)

Drawn P.WILLEY Date 09.06.00

Title

ALLERTON HIGH SPEC RAW SEWAGE PUMP STATION WITH DUAL PUMPS.

© Allerton.

Drg No.: PW.1034-5

Notes:
Unit to sit on 150mm min thick,
20 Nm concrete base and have
150mm min thick lean mix concrete surround.

Ref 0208/02

Red Blue 2

DRAW DIKE
SUTTON ST. JAMES.

PROPOSED SEWERAGE
TREATMENT WORKS

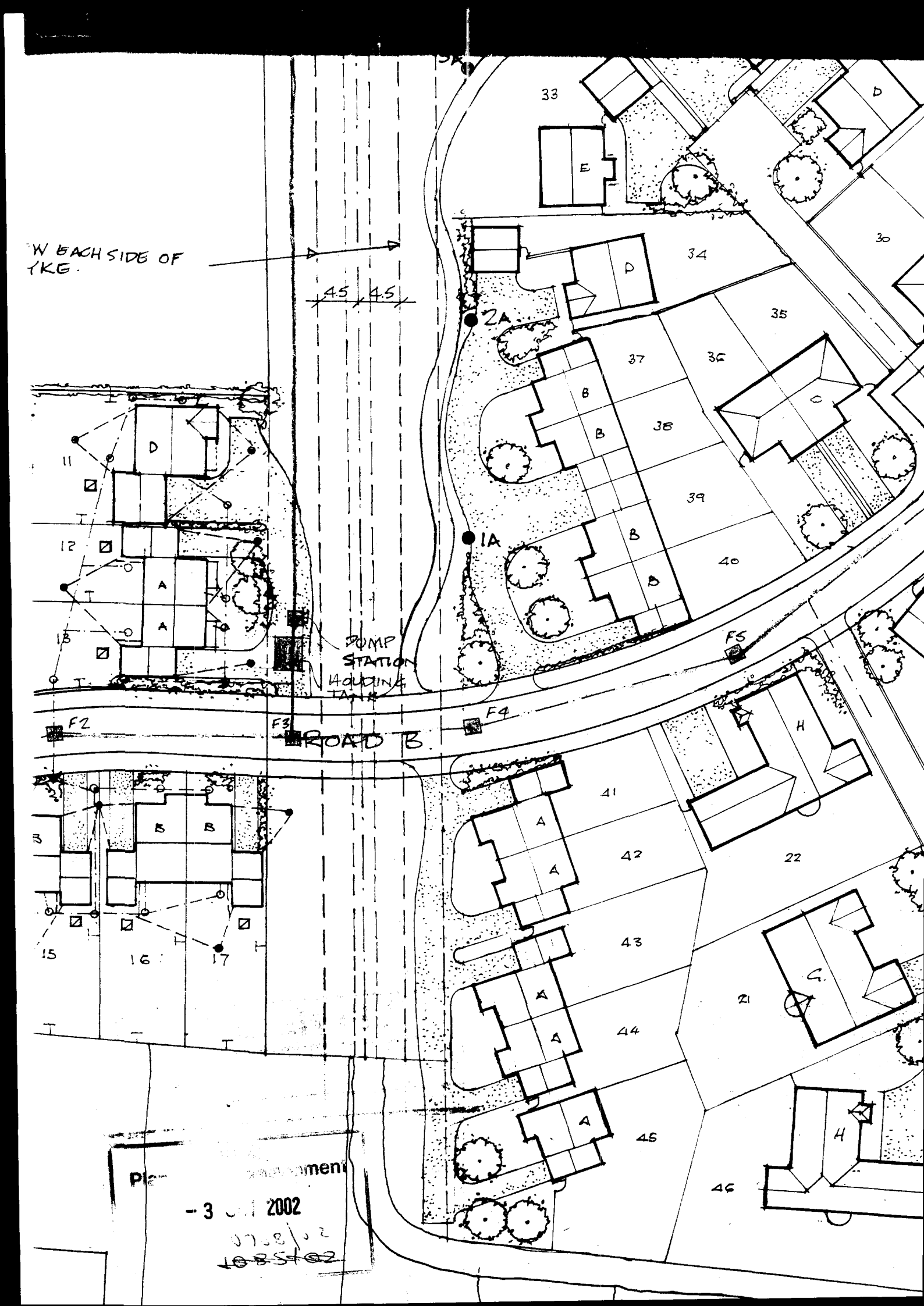

Pla... ...ment
- 3 ... 2002
0708/02
~~1085/02~~