

Front (East) Elevation 1:100

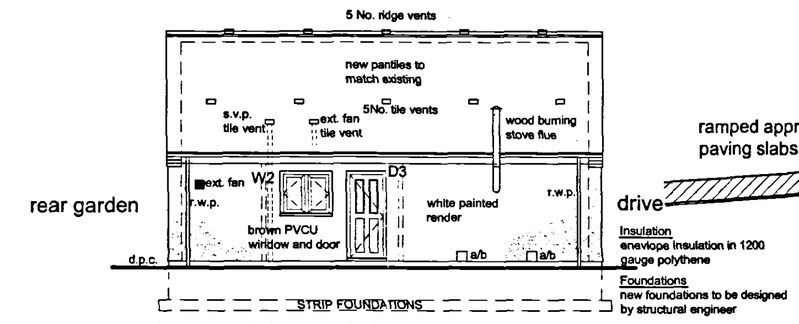

Side (South) Elevation 1:100

NOTE: DETAILED DESIGN OF BUNGALOW AMENDED AS PER DRG N° 573/03F REC'D 29/6/04.

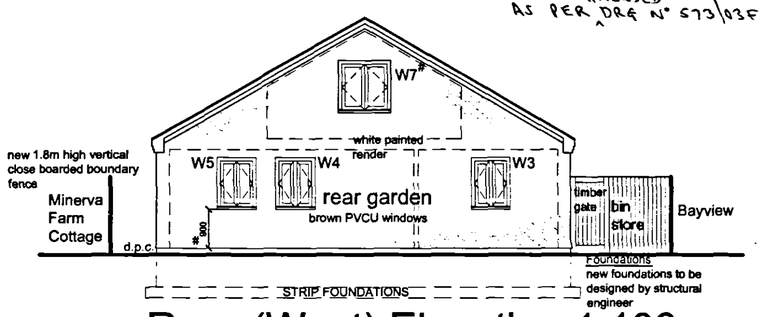

Rear (West) Elevation 1:100

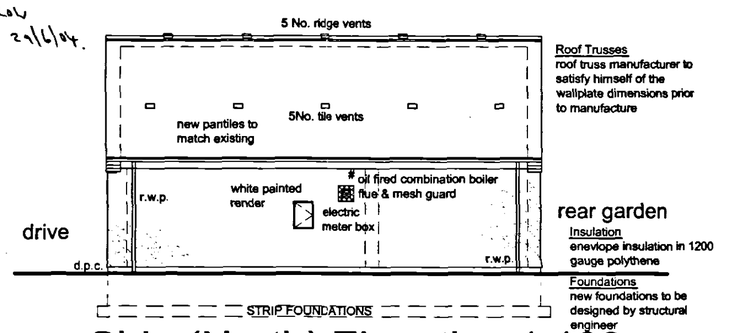

Side (North) Elevation 1:100

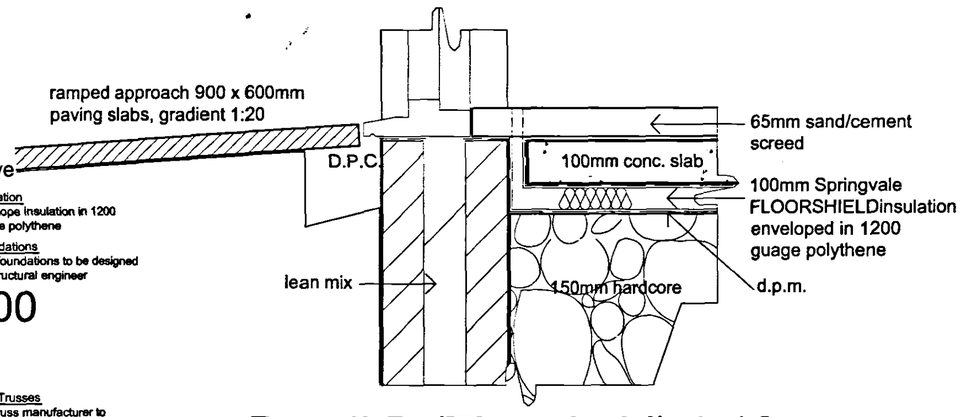

Detail B (Threshold) 1:10

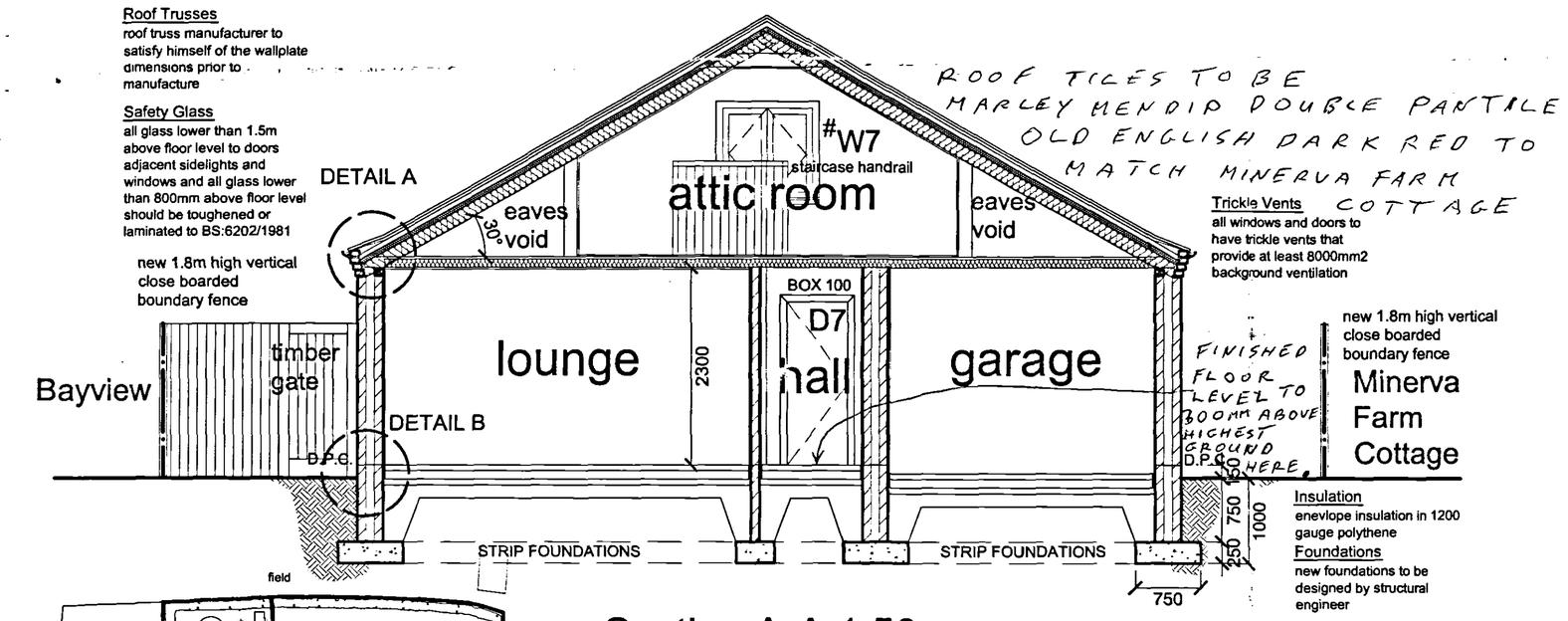

Section A-A 1:50

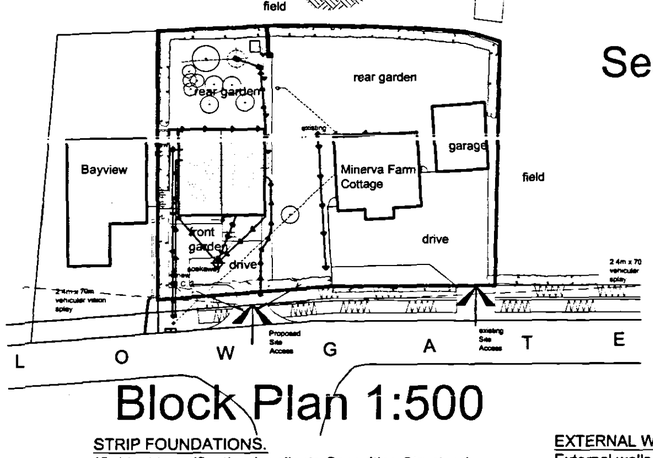

Block Plan 1:500

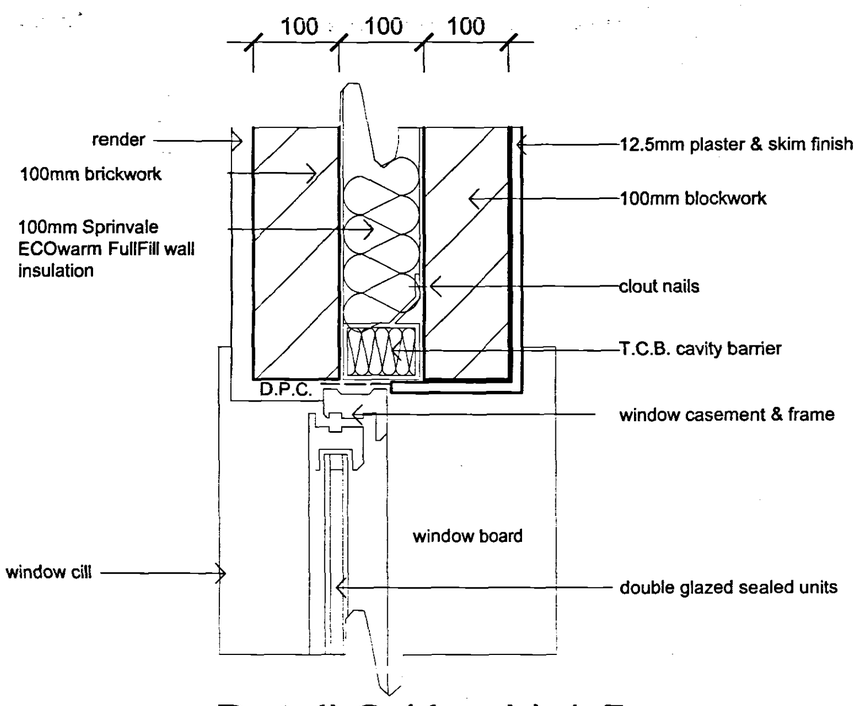

Detail C (Jamb) 1:5

STRIP FOUNDATIONS.
(Subject to ratification by clients Consulting Structural Engineer)
Trench excavation to a firm base a minimum of 1000 mm below ground level, (unless otherwise agreed with Building Control). Foundations to be 750 mm wide for 300 mm cavity walls and 450mm wide for 100mm block walls. Back fill excavation with ready mixed concrete GEN 1 to BS5328 or a 1:2:4 mix will be satisfactory. Foundation depth to be a minimum of 250 mm thickness. Foundation excavation to be inspected by Local Authority Building Control Officer.

EXTERNAL WALLS (Below D.P.C.)
Construct masonry cavity walls off concrete foundations to comprise 300mm overall thickness, two leaves of 100mm dense concrete 7N/mm2 blocks with 100mm cavity. Backfill cavity with lean-mix concrete splayed outwards to finish imediately below D.P.C..

DAMP PROOF COURSE.
Dpc to be installed to BS5628: Part 3: 1985 and in full compliance with manufacturer's recommendations and CP102. Dpc to be positioned min 150 mm above ground level in both leaves of external walls. Dpc in external leaf to project min 5 mm externally, in accordance with manufacturer's recommendations. Dpc in internal leaf to lap min 100 mm with dpm on floor slab. Provide vertical dpc to perimeter of all openings (stapled to all windows/door frames) and to all cavity closures. Provide additional dpc above all external lintels sloping outwards and below all internal blockwork walls built off foundations.

GROUND FLOOR, FLOOR CONSTRUCTION
All specified insulation products are by by Springvale Combat Limited. Contact Greg Lynch for details of local suppliers etc.:-

Dinting Vale Works
Glossop
Derbyshire SK13 6LG

Tel. (01457) 863211 Fax. (01457) 869269

Excavate to reduced levels. Lay a minimum of 150mm blinded hardcore in 150mm maximum layers. Lay 1200 gauge polythene lapped up inside face of cavity wall. Lay 100mm thick SPRINGVALE FLOORSHIELD SD/N T&G EPS insulation to be fully enveloped with 1000-guage polythene. Lay a 100mm insulation strip 25mm upright to perimeter of all walls. Over insulation pour 100 mm thick ready mix concrete with minimum cube strength of 30N/mm2 65mm sand/cement screed with chicken mesh reinforcement.

Floor Slab U-Value

Layer	d(mm)	layer	Rlayer	Description
			0.170	Rsi
1	100	1.130	0.088	cast concrete
2	100	0.038	2.632	FLOORSHIELD SD/N T&G EPS
	200		2.890	

Total Resistance 2.890m2 K/W

U-Value = 0.25 W/m3K

GARAGE FLOOR CONSTRUCTION
Excavate to reduced levels, lay a minimum of 150mm blinded hardcore in 150mm maximum layers. Blind with 25mm sand. Lay 1200 gauge polythene. Pour 100mm C20P concrete laid to fall 25mm from rear to front. Form threshold toe 450mm deep by 300mm wide.

DISABLED ACCESS, (THRESHOLD).
The footpaths are to be laid at finished floor level height adjacent the front entrances and ramped to the parking spaces at a gradient not exceeding 1:20 fall.

Front door width to provide a minimum clear width of 775 mm.

DRIVEWAY.
The driveway is to have sufficient width to enable people with disabilities to move past any parked vehicle from the point of access to the entrance of the dwelling.

EXTERNAL WALLS (Cavity Construction)
External walls to comprise 300mm overall thickness, 100mm thickness, 100mm thick facing brickwork outer leaf to BS 3921: 1974. 100 mm cavity fill with SPRINGVALE FULLFIL SD insulation and 100mm thick dense concrete blockwork, (7N/mm2), inner leaf to BS 6073: 1981. Insert proprietary cavity closure at the window cill and jamb details as indicated on the drawings. Build in 'perpend' weep holes above new lintels, min. No. 2 per lintel at generally at 450mm centers. Apply a two coat plaster walls. Apply a skim finish to the second coat. Between both leaves, fill the cavity with lean mix concrete up to minimum 150mm below the dpc level and slope off towards external leaf. Build into the cavity walls stainless steel wall tiles to BS 1449 : Part2: 1983 at 750mm horizontal, 450mm vertical centers in staggered formation, with additional wall ties at every block at perimeter of all openings and where the cavity is vertically closed.

Externally include all soldier and string courses as indicated on the elevations.

Wall construction U-Value = 0.34W/m2K

External Cavity Wall U-Value

Layer	d(mm)	layer	Fraction	Description
			0.130	Rsi
1	100	0.840	0.199	Concrete block
2	100	0.038	2.632	FULFIL SD
3	100	0.840	0.125	Brick outer leaf
			0.040	Rse
	300		3.046	

Total Resistance 3.046m2K/W

U-Value = 0.33 W/m3K

INTERNAL BLOCKWORK WALLS (LOADBEARING).
Loadbearing internal walls comprise 100 mm thickness Supabloc7 Durox blockwork to BS6073:1981 minimum 7N/M2 crushing strength. Build blockwork walls off strip foundations. Build in d.p.c. at same level as external leaf. plaster and skim finish to both sides

INTERNAL BLOCKWORK WALLS, (NON LOADBEARING).
Non loadbearing internal walls to comprise 100 mm thickness Supabloc4 Durox blockwork to BS 6073: 1981. min 4 N/mm2 crushing strength. Build blockwork walls strip foundations where indicated. Build in dpc at same level as external d.p.c. and add plaster and skim finish to both sides.

WINDOWS AND DOORS
All new external windows and doors to be proprietary made and to be doubled glazed PVCU units. Double glazed units to comprise, 6 mm Pilkington K glass internally, (safety glass is to be used where applicable), 16 mm air filled gap and 6 mm clear float glass externally giving a U-Value of 1.7 W/m3K. Opening casements to be as detailed on the drawings. Doors to include weather bar and draught seals. All new windows and doors to incorporate trickle ventilators and security locks to windows.

CRITICAL GLAZING LOCATIONS.
All glass below 800 mm above finished floor level to be safety glass. In addition, install safety glass below 1500 mm above finished floor level in doors and within 300 mm either side of the doors.

DRAUGHT STRIPPING.
To all new and existing joinery proprietary rubber double sealed draught strips are to be installed to all opening casements. Brush type draught seals to be provided the bottom of all internal and external doors except in the case of the additional sanitary accommodation.

LINTELS
All lintels specified to be manufactured by I G Lintels Limited and to be installed in strict compliance with manufacturers instructions.

Minimum end bearing of 150 mm both ends. All lintels to include proprietary insulation and to have weep holes included in perpendicular mortar joints above all external windows and doors.

Build in I.G. cavity trays above all lintels. Cavity trays to be installed in strict compliance with manufacturers instructions,

STAIRCASE. (INTERNAL).
Staircase to comprise softwood timber construction with 12 No. 212.5mm risers approx. and 250mm treads. Staircase to be 900mm wide overall and its pitch to be 40o, (maximum).

Provide minimum 2.0 m minimum headroom above the pitch line, measured vertically from the centre of the staircase. Landings are to be provided at the top and bottom of the flights, minimum 1000mm in length.

Provide a handrail guarding to the staircase and landing 900mm high measured vertically from the pitch line to the top of the handrail. Handrail guarding to be capable of with standing a horizontal force of 0.36KN/M.

STAIRCASE MANUFACTURER IS TO SATISFY HIMSELF OF FLOOR-TO-FLOOR DIMENSIONS AND SITE WORKING DIMENSIONS BEFORE MANUFACTURING THE STAIRS.

The guarding to the stairway and landing is to contain no apertures allowing the passage of a 100mm sphere and should not be easily climbable by children.

ELECTRICAL WORK.
All electrical fittings and fixtures are to be installed in positions shown on plan.

All electrical work is to be carried out in accordance with the current IEE regulations and all relevant British Standards and codes of practice.

LIGHTING.
Fix in the kitchen, en-suite,bed, garage, 1No. light fittings that only take lamps having a luminous efficiency greater than 40 lumens per circuit-watt.

External lights to be fitted with automatic night sensors to enable effective control.

SMOKE DETECTORS.
Provide smoke detectors in the positions indicated on plan. Smoke detectors are to be mains operated with battery back up, conforming to BS5446. All smoke alarms are to be interlinked.

CENTRAL HEATING & DOMESTIC HOT WATER
Build in oil fired central heating combination boiler & externally wall mounted, fan assisted balanced flue. copies of all instructions for appliances should be provided to the owner/occupiers. Boiler to have a minimum SEDBUK rating of 85 % and is to be fitted with the relevant zone and timing controls and boiler control interlocks. All radiators to include thermostatic radiator valves. Oil for centeral heating system to be stored in an integrally bunded tank and is to be a minimum of 800mm from any boundary.

PIPEWORK.
All pipes, except those visible in the bathrooms are to be heavily lagged using insulation material having a thermal conductivity not greater than 0.045 W/mK and in thickness equal to the outside diameter of the pipe up to a maximum of 40 mm.

PLUMBING
All plumbing to be to BS5572:1978 and to be as follows:-

Bath 50mm dia waste with 100mm deep seal trap.
Basin 50mm dia waste with 75mm deep seal trap.
Shower 50mm dia waste with 75mm deep seal trap.
W.C. 100mm dia waste with 100mm deep seal trap.
Anti-vac traps to be fitted to all appliances.

Plumbing runs to have 1.5° gradient and to include 110mm UPVC soil and vent pipe where indicated on plan. SVP to terminate min 900mm above highest opening in to the building & to be capped with a stainless steel bird cage. Include connection bosses where necessary and with access eye above highest connection. 50mm common waste where individual runs exceed that permissible, with rodding eyes at all changes in direction.

CONCEALED SERVICES.
All concealed services should be adequately boxed and sealed at floor and ceiling levels and piped services should be sealed where they project into hollow construction or voids including roof spaces and floor voids.

PLASTERWORK.
All plasterwork to comprise 11 mm thickness sand/cement render (applied in two coats) finished with 2 mm skim coat finish. Include for all appropriate galvanised steel corner meshes, angle beads, stops etc. At wall plate level, build into plasterwork stainless steel expanded metal lath fixed to wall plate and blockwork.

VENTILATION.
All windows and doors to incorporate min 8000 mm2 trickle ventilators for background ventilation. Background ventilation should be controllable, secure and located so as not to cause a draught.

Provide a mechanical extract fan to the en-suite capable of extracting 15 litres per second with a 15 minute over-run and operated intermittently. kitchen extract fan to be capable of an extraction rate of 60 litres per second.

ROOF CONSTRUCTION (Pre-fabricated)
Construct roof with prefabricated trussed rafters designed to BS5268 Part 3: 1985 at 600mm maximum centers to pitch indicated on section, together wit h100mm x 25mm diagonal windbraces, ridge binders, ceiling binders, including diagonal bracing to ceiling members and internal truss members, (twice nailed to each truss), all in accordance with manufacturers details and British Standards. TRUSS MANUFACTURER TO SATISFY HIMSELF OF ON SITE MEASUREMENTS BEFORE THE MANUFACTURE OF THE TRUSSES IS COMMENCED.

Between attic trusses lay and fix 150mm springvale Roofshield Insulation, over trussed rafters lay & fix 50mm springvale Roofshield insulation. over insulation lay and fix 50 x 50mm softwood preservative treated timber counter battens @ 600c/c. Over counter battens lay Blizzard 150 breather membrane over membrane to overlap 50mm into gutter lay & fix 38mm x 25mm softwood preservative treated battens at gauge to suit tiles. Over tiling battens fix pantiles in accordance with BS5534:1978. Tiles to suit roof pitch and to be installed in accordance with manufacturers instructions with all necessary ridge tiles, ridge tiles, ridge vents, tile vents, verge undercloaks, clips, nails etc.

Provide galvanized mild steel truss clips to each truss. Supply Local Authority with truss manufacturer design certificate and calculations for approval prior to erection of the roof on site. Build-in30 mm x 5 mm galvanized mild steel anchor straps at 1.8m maximum centers fixed to 2No. trusses at rafter and ceiling tie level with No. 12 x 5 mm Sheradized wood screws. Include for solid noggins between truss and wall between each truss. Straps to have 150mm downturn hooked over inner leaf of cavity wall.

Build in 30mm x 5mm galvanized mild steel anchor straps at 1.8m maximum centers, fixed to three joists where running parallel with wall. Straps to have 150mm down turn hooked over inner leaf of cavity wall and fixed using No.12mm x 50mm Sheradized wood screws. Solid noggins to be provided between joists and wall and between each joist at strap positions. Depth of noggins to be at least half of joist depth.

Build in 30 x 2.5mm galvanized mild steel holding down straps at 2.0 maximum centers, straps to be 900 mm long and fixed to rafter feet, wall plate and wall with No. 12 x 50mm Sheradized wood screws, (6 fixings to wall). Provide additional straps either side of openings to maintain number of straps for equivalent uninterrupted wall.

Provide tilting fillet to feet of rafters and build in a proprietary eaves ventilator. Over-lay tilting fillet with 6 mm W.B.P. plywood.

Line underside of joist and rafters with 15mm plasterboard with a minimum density of 10kg/m2, complete with noggins to all unsupported edges. Between first floor floor joists lay 100mm glas fibre sound insulation. Cotton scrim all joints, plaster skim finish. lay and fix to top of joist 22mm thick moisture resistant T&G chipboard.

All Joists to be doubled up around staircase and trimmers inserted.

GARAGE PERSONNEL DOOR
Garage door to be a fire FD30S with smoke seals and is to be fitted with a self closing mechanism. There is to be a step up from the garage to the dwelling of a 100mm minimum.

Fire Place Notice
Fire place notice is to be located next to the water supply stop cock and is to be robust, indelibly marked and securely fixed. Notice is to state the location of the hearth, the category of the flue and generic types of appliances that can be safely accommodated, and the type size and date of installation of flue.

FLASHINGS.
Provide Code 4 stepped lead flashings where dormer cheeks meet roof & bow window roof meets brickwork. Flashings to be folded into mortar joints where apllicable including all necessary wedges. Point to match.

RAINWATER GOODS.
Rainwater goods to comprise 100 mm black half round PVCU guttering, to match existing, discharging into 65 mm PVCU down pipes in positions indicated on plan. Rainwater to discharge into new Soakaways and existing septic tank.

SOAKAWAY.
Construct new rainwater Soakaway where indicated on plan at least 5 metres from any building. Soakaway to be 1m3 below invert backfilled with granular material 150 mm to 10 mm. The end of the inlet pipe should be surrounded by only the large pieces to ensure that the rainwater can flow freely into the main mass of granular material. Above the pipe the size of the pieces should be gradually reduced until the surface of the granular material at 500 mm below the ground surface can be blinded with sand and a sheet of 1200 gauged polythene before covering with topsoil. Lay 100 mm diameter UPVC rainwater drain pipe on 100 mm pea gravel bed backfilled drainage excavation with pea gravel to a height of 100 mm above ground and pipe.

DRAINAGE
Re use existing perforated pipes to form new 6m long drainage field for discharge of storm water.
To BS8301, lay PVCU drain pipes, sizes and gradients as indicated on plan. All PVCU pipes and fittings to comply with BS4660 to be laid on 100mm pea gravel bed. Back fill drain excavation with pea gravel to a level of 100mm above the pipe. Where pipes pass through external walls provide 100mm x 65 mm pre-stressed concrete lintels to support walls above. Provide minimum 50mm clearance all round the pipe and mask the open rigid sheet material. Provide where indicated a 450mm nominal diameter PVCU inspection chamber complete with blanking pieces to unused connections as required. Bed inspection chamber on 100mm pea gravel and surround with grade C20P concrete, 100mm thickness. Cover to comprise 450mm internal diameter BS497 grade 'B' cast iron cover and frame bedded in cement mortar. Drain runs serving gullies to have a minimum fall of 1:40.

All gullies to be fitted with fixed metal grates.

Inspection chambers with less than 1m invert to have an internal dimension of 450mm. Brick manholes with an invert up to 2.0m in depth to have an internal dimensions 1200mm x 750mm and a cover 600mm x 600mm. All light weight manhole covers are to be screwed down.

MANHOLES
Construct manholes where required with concrete GEN3 or (1:2:4) mix, base and cover slab, benching with a wood floated and steel trowelled finish, one brick sides and raising courses as necessary in Class "B" Engineering bricks. Form brick arches over pipes, half round main and branch channels, build in step irons where required and bed and haunch cast iron cover and frame. All light weight manhole covers are to be screwed down.

The Contractor shall provide any formwork, permanent or temporary, that he may require for the completion of this work and carry out all works in accordance with the relevant Code of Practice and to he satisfaction of the Local Authority Building Control Officer.

DETERMINED PLAN

SHDC Planning & Development
25 JUN 2004
Ref: 0864/04

New Bungalow, Blandville, Lowgate, Tydd St Mary, Wisbech — JOB
1:5 1:10 1:50 1:500 — SCALE
Working Drawing — TITLE
D March 2004 (Removal of Rooflights) — REVISED

573/03E
Mr V. Beesley
August 2003

89 Gedney Road, Long Sutton, Spalding, Lincs. PE12 9JU.
Tel: (01406) 364646. Fax: (01406) 364471. Email molearch@tinyworld.co.uk
SE ARCH
Sustainable Ecological Architecture Ltd

THIS DRAWING IS THE COPYRIGHT OF THE ARCHITECT AND IS NOT TO BE REPRODUCED WITHOUT PRIOR PERMISSION.

ALL DIMENSIONS AND PARTICULARS ARE TO BE CHECKED ON SITE BEFORE WORK COMMENCES. DO NOT SCALE OFF THIS DRAWING.